Ver. 01

Installation and Maintenance Manual
Technical Data & Specifications

80 & 81 Series RSBFV

Installation Instructions

General information on butterfly valves

- Before shipping, seat surface and stems can be lubricated with a mixture of silicon free grease and it can be removed with solvent. In case the valve is for oxygen, hydrogen and chlorine service, the seat duly selected, when cleaned and degreased, can be used with food products.
- Butterfly valve with disc and stems in stainless steel and with the seat duly selected, when cleaned and degreased, can be used with food products.
- The valve can be installed in the pipeline in any position.
- Before installing the valve, the pipeline must be cleaned from dirt and welding residues. Otherwise seat may be damaged.
- Pipe must be free of tension.
- Wafer and Lug type butterfly valves can be installed directly in between flanges without interposing any gasket. A single series of '0' rings as of the seat profile of the vulcanized rubber guarantees a thorough external tightness.
- Installation in line related to wafer butterfly valve (on the existing pipe.)
- Verify the distance between two flanges to be equal to face to face valve dimension.
- In order to facilitate installation of the valve, allow with adequate tools a sufficient room in between flanges.
- Insert in the lower part of flanges at least two flange-bolts.
- Close disc at 70° when you do not use valve.
- Insert the valve in between flanges, valve shall be held by the two flange-bolts previously fitted in the lower part of flanges.
- Insert the flange-bolt through centering lugs of valve.
- Insert all the remaining flange-bolts aligning the valve with the flanges and tightening flange-bolts manually.
- Maintain the valve alignment, remove gradually flange spreaders and tighten bolts partially.
- Control open / close operation of valve should be easy and smooth.
- Open the valve and complete cross tightening the bolts to adequate torque. (See Torques)
- Installation of Lug type butterfly valves has same procedure of wafer type using studs instead of bolts and nuts.
- Installation in line related to wafer butterfly valve (in the new pipeline.)
- Centering the two flanges with the valve body.
- Span the body with some flange-bolts and tighten the bolts partially. Finish tightening by uniform cross bolting.
- Use the flange-valve-flange unit to fit up and pipe centering.
- Tack-weld the flanges to the pipe.
- Remove the bolting and the valve from the flanges.

Important : do not complete flanges welding procedure when the valve is inserted as high heat temperature can damage valve seat.

- Weld flanges to the pipe and wait until completely cooled
- Install the valve following the installation instructions on existing pipeline.

Installing Procedure

Correct installing Procedure

- Spread Flanges to facilitate valve insertion with disc in semi-closed position.
- This avoids disc edge to be damaged during installation and reduce interference ; moreover reduces initial torque.
- Disc has to be completely open after having aligned valve in between flanges before tightening all bolts.

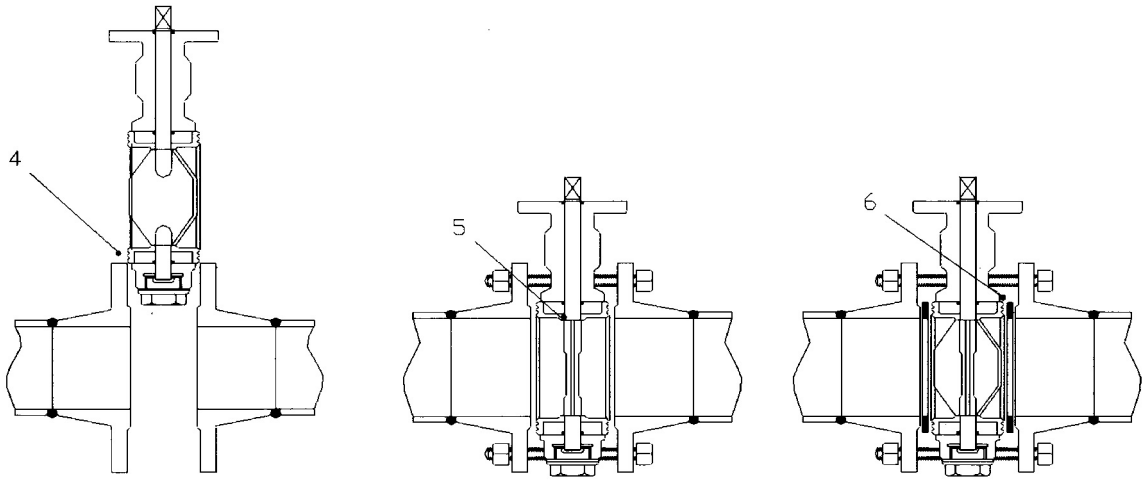

Incorrect Installing Procedure

- A pipe flange not spreaded enough can tear the rubber, an open disc when installing the valve, may hit against pipe flanges and may cause damage to disc profile.
- Valve installation with totally closed disc can distort seat during bolt tightening and may increase initial torque.
- Do not use gaskets between valve and flanges.

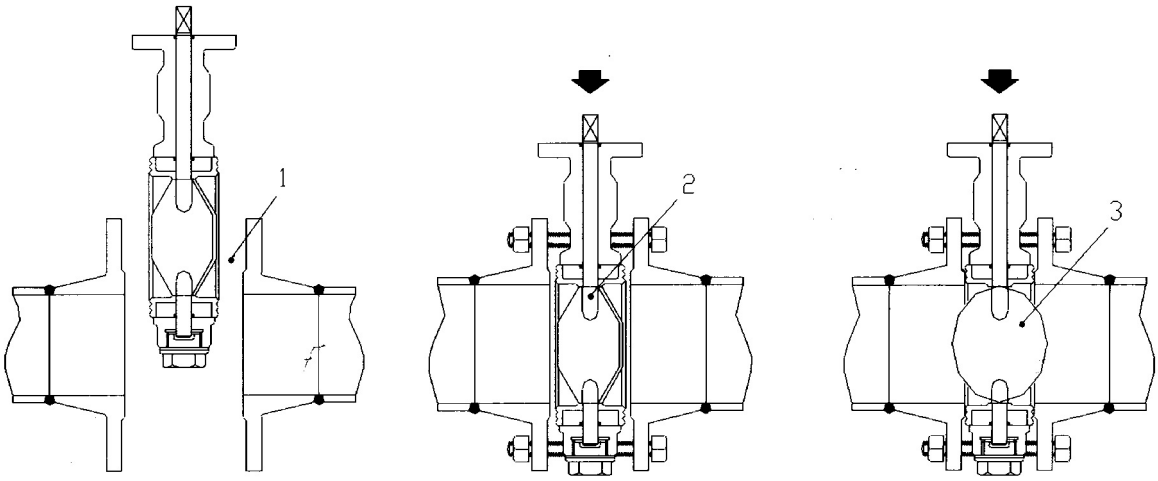

Maintenance & Repair

•J Flow Controls Butterfly valve features minimize wear and maintenance requirements. No routine lubrication required.

• In the case of valve not closing, leakage is due to seat damaged or to damaged disc edge. It will be then necessary to disassemble the valve and replace damaged parts.

•Use caution before disassembling the valve from the line.

• Fluid flowing in a pipe could be corrosive, toxic, flammable or contaminated.

• Before removing valve, insure that no pressure is present in line, either upstream or downstream of the valve. We recommend an isolation valve upstream and downstream to isolate the valve to be repaired.

• Following safety precautions are recommended when repairing the valve.

- Always wear protective glasses or eye shields.
- Always wear gloves and overalls
- Wear protective footwear
- Ensure easy availability of running water
- Have ready an adequate fire extinguisher if media is flammable.

• Shut almost completely the disc. Remove all nuts and after all bolts with the exception of the two lowest sustaining the valve.

•Spread the flanges with proper tools and remove valve to substitute seat and disc (do not use the valve to spread flanges, because seat damage might be the result)

< Disassembling of valve.>

• Remove locking screws between valve top parts of stem and operator or remove fixing bolts and nuts between top flange and gear operator.
  In case of lever operator, remove fixing bolts and nuts between top flange & indicator plate.

• Remove retainer plate screw

• Pull out upper stem & packing

• Un-tighten a screw M5 on the lower stem to pull it out.

• Remove disc : pushing and turning it out from the seat.

• Remove seat from the valve body applying pressure to by light wooden hammer blow or by using soft tools.

<Assembling of valve>

• Lubricate with seat protection grease outside seat area and insert it in the valve body for longer seat life.

• Match perfectly seat holes with body holes using a round bar with a conical end.

• Apply seat protection grease on internal seat surface where contact with disc edge.

• Insert disc : pushing and rotating it towards the seat location, the square connection aligned to the valve neck.

• Before insert upper stem, Put packing into body, retainer plate to stem, then pull upper stem down to disc and fastern the retainer plate screw up.

• Install indicating plate or assemble gear unit.

• insert lever into stem by light wooden hammer and fasten bolt.

Operating Instruction

Manual Operation

- Open and close operations are obtained with a quarter turn by handlever(90°). Handlever is supplied in plate epoxy coated from 50mm~150mm and ductile iron epoxy coated lever for 200mm, 250mm & 300mm. When watching to the lever position, it is easy to identify whether the valve is opened or closed.
- The valve is in the open position when the lever is in line with the pipe. (i,e. in line transversal to the valve)
- The valve is in closed position when the lever is transversal to the pipe. (i,e. in line with the valve)

Remote Control

- When the manual operation is not required, the valve can be operated automatically with remote control by means of an actuator either pneumatic or electric or gas over oil.
- When it is required pneumatic actuator with the valve, no assembly problems arise since the valve is supplied with actuator directly fitted.
- Usually the valve is supplied without limit switch as this makes part of the operators, when required.

Warranty

Butterfly Valves warrants to the original purchaser, for a period of 12 months from after the date of purchase that its products will be free from defects in workmanship and materials, not caused or resulting from improper usage application.
Improper installation, improper maintenance, repair modification or alterations. The defective products to be repaired, replace with a substantially identical products or accept the return of defective products and refund the purchasing price to the original purchaser.
J Flow Controls shall bear all normal surface transportation costs to the original purchaser but not for any installation, engineering or other costs incurred in connection with repair or replacement.

Note : Dimension Class 150 : ANSI 150, JIS 10/16K, DIN PN 10/16
Class 300 : ANSI 300, JIS 20/30K, DIN PN 25/40

Elastomer general table

Elastomer seats have been chosen to satisfy every service need. Application suggested derive from recommendation given by the elastomers, manufacturers and are purely indicative.
Since many factors influence corrosion and abrasion (type of fluid, concentration, temperature, turbulence, impurities etc.), the final choice is to be taken by the customer, based on characteristics and specific application.

NAME	Composition	General application	Temperature limit		Other limits	Availability
EPDM	Ethylene - Propylene Terpolymer	Water - steam Sea water Brine Esters Ketone Alkalis Caustic Soda	-30°C +110°C	-22°F +194°F	Not recommended for hydrocarbons - oils - fats	On stock for immediate delivery
EPDM HIGH / TEMP (HT)			-30°C +130°C	-22°F +266°F		
BUNA - N	Copolymer of Butadiene and high Acrylonitrile	Hydrocarbons Natural Gas Oil and fat Air Gasoline	-20°C +90°C	-4°F +194°F	Not recommended for solvents - Benzene - Xylol	
NEOPRENE	Chloro butadiene	Fats Oils Diluted mineral acids Alkalis	-20°C +90°C	-4°F +194°F	Not recommended for Ketones, thinners Concentrated Acids	On stock in limited quantities
HYPALON	Chlorosulfonated Polyethylene	Mineral acids Organic acids Oxidising substances Fats	-18°C +100°C	0°F +212°F	Not recommended for Nitric acid - Steam Ketones	
VITON	Fluorocarbon polymer	Acids Oils Hydrocarbon	-10°C +160°C	+14°F +320°F	Not recommended for Steam - Freon22 Solvent - Ketones - Esters - Alkalis	
NATURAL RUBBER	Latex (vegetable)	Abrasive products	-35°C +65°C	-30°F +150°F	Not recommended for steam Oil - Hydrocarbons	
SILICON	Organic silicon Polymer	Food & Beverage	-30°C +150°C	-22°F +300°F	Not recommended for steam Solvents - Hydrocarbons	

NOTES : The above table is merely indicative. The customer is expected to make the final decision on the suitability of seat materials for their specific applications.

Material selection guide

Code :
E = Excellent
G = Good - slightly attacked
F = Fair - moderately attacked, probably unsuitable
U = Not recommended
- = No data

Chemical agents	METALS						ELASTOMERS					
	CARBON STEEL AND DUCTILE IRON	410SS (STEMS ONLY)	316SS	ALUMIN-IUM BRONZE	HASTELLOY C	MONEL	EPDM	BUNA N	NEO-PRENE	HYPALON	VITON	NATURAL RUBBER
Acetaldehyde	U	U	E	U	E	F	G	U	U	U	-	F
Acetic acid 50% 50˚C	U	U	E	U	E	F	G	U	G	G	U	U
Acetic acid - Anhydride	U	U	E	U	E	F	U	U	U	G	U	U
Acetone	G	G	E	E	E	E	G	U	U	U	U	U
Acetylene	G	E	E	E	-	-	U	F	U	U	U	U
Acrylonitrile	G	G	E	E	-	E	U	U	U	U	U	U
Air (Dry)	E	E	E	E	-	E	E	E	E	E	-	-
Alcohol - Amyl	F	G	E	E	-	E	-	F	F	G	G	-
Alcohol - Butyl	F	G	E	E	E	E	-	F	G	U	-	-
Alcohol - Ethyl	U	-	E	E	E	E	E	G	G	G	G	G
Alcohol - Methyl	U	-	E	E	E	E	E	G	G	G	U	G
Alum - Ammonium	U	-	G	-	-	-	-	G	G	F	G	F
Alum - Chrome	U	-	G	-	-	-	-	G	G	F	G	F
Alum - Potassium	U	-	G	-	-	-	-	-	G	-	-	-
Alumina	G	G	G	G	E	G	E	E	F	G	G	G
Aluminum Chloride	U	U	U	U	-	E	E	E	E	E	E	E
Aluminum Fluoride	U	-	G	-	-	G	-	G	G	-	G	-
Aluminum Hydroxide	U	-	G	-	-	-	-	G	G	-	G	-
Aluminum Sulphate	U	G	G	U	E	-	-	E	E	E	-	-
Amines	U	F	E	-	-	-	-	F	-	-	-	-
Ammonia, Anhydrous	F	G	E	U	-	-	E	G	-	-	U	-
Ammonia gas 150˚F	U	U	E	U	-	-	G	-	-	U	-	-
Ammonia solutions	F	G	E	U	E	G	E	G	G	G	U	G
Ammonium Chloride 50%, 180˚F	U	F	G	U	E	G	-	-	E	E	-	-
Ammonium Hydroxide	U	G	E	U	E	F	E	U	E	E	G	U
Ammonium Nitrate 5%, 60˚F	F	G	E	U	E	G	-	E	E	F	-	-
Ammonium Phosphate	U	F	G	U	G	G	E	E	E	E	-	G
Ammonium Sulphate	U	F	G	U	G	G	E	E	E	E	E	-
Amyl Acetate	F	G	E	E	E	G	-	U	-	F	F	U
Amylchloride	F	G	E	E	E	-	U	U	U	U	U	U
Aniline 90% 70˚F	F	G	E	F	E	-	G	U	U	U	G	U
Asphalt	E	E	E	E	E	E	-	U	U	U	E	U
Barium Carbonate 60˚F	U	-	-	G	E	G	E	E	E	-	-	-
Barium chloride	U	-	-	-	E	G	E	E	E	E	E	E
Barium Hydroxide	F	E	E	U	-	-	-	E	E	E	-	U
Barium sulphate	U	-	E	G	-	G	E	E	E	E	E	E
Barium sulphide	F	E	E	U	-	-	-	E	E	-	-	-
Beer (beverage)	U	E	E	U	E	-	E	-	-	-	-	-
Beet sugar solution	U	E	E	U	-	-	-	E	E	G	-	-
Benzaldehyde	F	E	E	E	-	-	G	U	U	U	U	U
Benzene (benzol) 70˚F	F	E	E	E	E	G	U	U	U	U	G	U
Benzoic Acid 5%	U	G	E	-	E	G	-	F	F	F	-	-
Borax	U	F	E	U	E	E	-	G	E	E	-	G
Boric acid 5% 200˚F	U	F	E	F	E	G	E	E	-	E	-	-
Brine	U	-	-	-	-	G	E	E	E	E	-	-
Bromine - Gas	U	U	U	-	E	F	U	U	U	U	G	U
Bromine - Water	U	U	U	-	E	F	U	U	U	U	G	U
Butadiene	F	G	E	-	-	-	-	G	-	-	G	-
Butane - Butylene	G	E	E	E	E	E	U	G	G	G	G	U
Butyl Acetate	G	E	E	E	-	-	F	U	U	U	U	U

Material selection guide

Code :
E = Excellent
G = Good - slightly attacked
F = Fair - moderately attacked, probably unsuitable
U = Not recommended
- = No data

Chemical agents	METALS						ELASTOMERS					
	CARBON STEEL AND DUCTILE IRON	410SS (STEMS ONLY)	316SS	ALUMIN-IUM BRONZE	HASTELLOY C	MONEL	EPDM	BUNA N	NEO-PRENE	HYPALON	VITON	NATURAL RUBBER
Butyric Acid 5%	U	G	E	-	E	-	U	U	U	F	U	U
Calcium carbonate 60˚F	F	-	-	-	E	E	E	E	E	E	E	E
Calcium chlorate 20%	-	G	E	-	E	G	-	-	E	E	-	-
Calcium chloride	F	G	G	F	E	G	E	E	E	E	E	G
Calcium chloride solution	F	G	E	F	E	-	E	E	E	E	E	G
Calcium Hydroxide 50% 175˚F	F	E	E	U	E	E	E	E	E	E	E	E
Calcium Hypochlorite	-	G	G	-	-	-	-	F	G	E	-	-
Calcium Sulphate	F	E	E	E	-	G	E	E	E	E	E	E
Carbon Dioxide	F	E	E	E	-	-	G	G	G	E	E	G
Carbon Tetrachloride	U	G	G	F	-	G	U	U	U	U	E	U
Carbonic Acid	U	G	G	-	E	G	-	E	-	-	-	-
Chlorine gas - dry 70˚F	U	F	G	F	E	F	U	U	U	G	E	U
Chlorobenzene 90%	F	E	E	E	-	E	U	U	U	U	G	U
Chromic Acid 5% 70˚F	U	G	E	U	-	-	U	U	U	E	E	U
Citric acid 5% 150˚F	U	F	E	F	E	G	E	G	E	-	E	U
Coffee (food)	U	U	E	U	-	-	E	U	E	E	E	E
Copper Sulphate	F	G	E	U	-	U	E	E	E	E	E	G
Cyclohexane	F	E	E	E	-	-	U	E	U	U	E	U
Dextrose (food)	U	U	E	-	-	-	-	E	-	-	-	-
Diacetone	U	-	-	E	-	-	E	U	U	U	U	U
Dichloroethene	U	-	F	-	-	-	U	U	U	U	G	U
Diesel Fuels	F	E	E	G	E	E	U	E	-	-	E	-
Diethyl Amine	F	E	E	E	-	-	F	U	U	U	U	F
Dowtherms	G	E	E	E	-	-	U	U	G	G	E	U
Drilling Mud	G	-	E	-	-	E	U	E	-	E	-	U
Ethers	U	-	E	E	E	G	U	U	U	U	-	U
Ethyl Acetate	F	G	E	-	E	E	G	U	U	U	U	U
Ethyl Chloride 5%	F	G	E	E	E	G	E	E	F	U	E	F
Ethyl Glycol	G	E	E	E	-	E	E	E	G	E	E	G
Ethylene Oxide	G	G	E	-	-	-	U	U	U	U	U	U
Fats	E	E	E	E	-	-	U	E	G	G	-	-
Ferric Chloride	U	U	-	U	U	E	-	F	G	E	-	-
Ferric Nitrate	U	-	E	-	-	E	G	F	F	F	-	-
Ferric Sulphate 5%	U	-	G	U	-	E	-	E	E	-	E	-
Ferrous Sulphate	F	G	E	U	-	-	G	E	G	G	G	G
Fluorine	U	U	U	U	-	G	-	G	F	G	-	-
Fluosilicic Acid	U	F	G	E	-	-	-	E	G	E	-	-
Formaldehyde 70˚F	U	G	E	E	E	G	E	G	E	E	E	-
Formic acid 5% 150˚F	U	G	E	E	E	G	-	U	E	G	U	U
Freon	F	E	E	E	E	E	U	G	G	G	G	U
Fruit Juices (food)	U	U	E	U	E	-	G	G	G	-	-	-
Fuel Oil	F	E	E	E	E	G	U	F	F	U	E	U
Gallic Acid 5% 200˚F	U	-	E	-	E	-	-	G	G	F	G	-
Gasoline	F	E	E	G	-	G	U	E	F	U	E	U
Glucose	U	F	E	G	E	G	-	E	E	-	E	-
Glycerine / Glycerol	F	E	E	G	E	G	-	E	E	E	E	-
Heptane	F	G	E	E	-	-	U	E	G	G	E	U
Hexane	F	G	E	E	-	-	U	G	G	G	E	U
Hydrobromic Acid 200˚F	U	U	U	U	E	U	U	U	U	U	U	U
Hydrochloric Acid 15% 60˚F	U	U	U	U	E	U	E	U	U	E	E	-

Material selection guide

Code :
E = Excellent
G = Good - slightly attacked
F = Fair - moderately attacked, probably unsuitable
U = Not recommended
- = No data

Chemical agents	METALS						ELASTOMERS					
	CARBON STEEL AND DUCTILE IRON	410SS (STEMS ONLY)	316SS	ALUMIN-IUM BRONZE	HASTELLOY C	MONEL	EPDM	BUNA N	NEO-PRENE	HYPALON	VITON	NATURAL RUBBER
Hydrochloric Acid 37% 60˚F	U	U	U	U	E	U	U	U	U	E	E	U
Hydrofluoric Acid 20%	U	F	U	U	E	F	-	U	G	F	E	U
Hydrofluoric Acid 20~60%	U	U	U	U	E	U	-	U	U	U	E	U
Hydrogen	F	G	E	F	-	-	E	E	E	E	E	E
Hydrogen Peroxide 90%	U	F	G	U	U	E	-	U	U	E	G	U
Hydrogen Sulfide	F	F	G	F	-	-	E	U	G	F	U	U
Iodine Solution	U	U	U	U	E	E	-	U	U	F	F	U
Iso-octane	F	E	E	E	E	E	U	E	G	E	E	-
Isopropyl Alcohol	F	E	E	E	E	E	-	G	F	E	E	-
Isopropyl Ether	F	E	E	E	E	E	U	E	F	G	E	U
Kerosene	E	E	E	E	E	E	U	E	F	F	E	U
Lactic Acid 5%	U	F	G	U	E	G	-	F	E	E	-	-
Lubricating Oil	E	E	E	E	E	E	U	E	G	G	E	U
Magnesium Chloride 4%	F	F	G	F	E	G	E	E	E	E	E	E
Magnesium Hydroxide	F	E	E	G	-	-	E	G	E	E	E	G
Magnesium Sulphate	F	G	E	E	E	E	E	E	E	E	E	G
Mercuric Chloride 3%	U	U	F	U	E	G	E	E	E	-	-	-
Mercury	E	E	E	U	E	E	E	E	E	E	E	E
Methane	U	-	E	E	-	-	U	E	G	G	E	U
Methyl Acetate	F	G	E	E	-	-	F	U	U	U	U	U
Methyl Acetone	F	E	E	E	-	-	G	U	U	U	U	U
Methyl Chloride	G	G	E	E	-	-	U	U	U	U	E	U
Methyl Ethyl Ketone	E	E	E	E	-	-	U	U	U	U	U	U
Milk (food)	U	U	E	-	E	-	E	E	E	E	E	E
Mineral Oil	F	-	F	-	E	-	U	E	G	G	E	U
Molasses (food)	U	U	E	U	-	-	E	-	E	-	-	-
Napthalene	F	E	E	E	-	-	U	U	-	-	G	U
Natural gas	G	E	E	E	-	-	U	E	U	E	E	U
Nickel Chloride	U	-	F	-	E	-	-	E	E	-	-	-
Nitric acid less 40% 70˚F	U	-	-	U	G	U	U	U	U	E	E	U
Nitric acid more 40% 70˚F	U	U	U	U	G	U	U	U	U	-	F	U
Nitrobenzene	U	-	E	-	-	-	U	U	U	U	G	U
Oleum	U	U	F	-	G	-	U	U	U	U	E	U
Olive Oil	-	-	E	-	-	-	G	E	G	G	E	U
Oxalic Acid	U	F	G	U	G	-	G	U	U	G	G	U
Oxygen 200˚F	E	E	E	E	E	E	E	G	G	G	E	F
Oxygen 300˚F	E	E	E	E	E	E	U	U	U	U	G	U
Palmitic Acid	U	G	E	G	-	-	-	E	G	G	-	-
Perchloroethylene	F	G	E	-	-	-	U	F	U	U	E	U
Petroleum	U	G	G	F	E	G	U	E	G	G	E	U
Phenol	U	-	E	-	E	E	U	U	U	U	E	U
Phosphoric Acid 5%	U	F	G	U	E	G	F	F	G	E	E	F
Phosphoric Acid 85% 70˚F	U	U	G	U	F	-	F	F	G	E	-	F
Picric Acid 80%	U	-	E	-	E	F	U	-	G	E	-	-
Potassium Cyanide	F	G	E	U	-	-	-	E	E	-	E	-
Potassium Hydroxide 5%	F	G	E	U	E	E	-	E	E	E	E	-
Potassium Nitrate	F	G	E	F	E	G	E	E	E	E	E	E
Potassium phosphate	U	-	G	-	-	-	-	E	E	-	E	-
Potassium Sulfide	U	G	E	-	-	-	-	E	-	-	-	-
Potassium Sulfite	U	-	E	-	-	-	G	F	G	G	-	-

Material selection guide

Code :
E = Excellent
G = Good - slightly attacked
F = Fair - moderately attacked, probably unsuitable
U = Not recommended
- = No data

Chemical agents	METALS						ELASTOMERS					
	CARBON STEEL AND DUCTILE IRON	410SS (STEMS ONLY)	316SS	ALUMIN-IUM BRONZE	HASTELLOY C	MONEL	EPDM	BUNA N	NEO-PRENE	HYPALON	VITON	NATURAL RUBBER
Propane	F	E	E	E	-	-	U	E	E	E	E	-
Resins	U	E	E	E	E	-	-	-	F	F	G	F
Sea Water 70˚F	U	U	G	G	E	E	E	G	E	G	E	-
Soap Solution (stearate)	U	F	E	E	E	G	E	E	E	E	E	-
Sodium Acetate 5%	U	F	E	E	E	G	E	G	G	-	U	-
Sodium Bisulfate	U	F	E	-	-	-	-	E	E	-	E	-
Sodium Carbonate	U	G	E	G	E	E	E	E	E	E	E	E
Sodium Chloride 30% 180˚F	U	F	E	E	E	E	E	E	E	E	E	E
Sodium Cyanide	U	-	E	U	-	-	-	E	E	-	E	-
Sodium Fluoride 5% 60˚F	U	-	-	F	E	G	-	-	-	-	E	-
Sodium Hydroxide 50% 122˚F	U	F	G	U	E	G	E	U	G	E	U	G
Sodium Hydroxide 50% 176˚F	U	F	G	U	E	G	G	U	-	G	U	U
Sodium Hypochlorite 5% 60˚F	U	-	G	U	E	E	G	U	G	G	E	U
Sodium Nitrate	U	G	E	G	E	G	E	G	E	E	-	G
Sodium Perborate	U	G	E	-	-	-	-	G	G	-	E	-
Sodium Peroxide	U	G	E	U	-	-	E	G	G	G	E	G
Sodium Phosphate 5%	U	G	E	-	E	G	E	E	E	E	E	E
Sodium Silicate	U	G	E	G	E	G	E	E	E	E	E	E
Sodium Sulfide 70%	U	G	E	U	E	-	-	-	-	-	E	-
Sodium Sulfide	U	-	-	U	E	G	G	E	G	G	-	-
Sodium Sulphate 80% 60˚F	U	G	E	G	E	G	E	E	E	E	E	G
Steam 300˚F	U	U	E	G	-	E	E	U	U	U	U	U
Stearic Acid 90% 200˚F	U	G	E	F	E	F	-	G	G	G	-	-
Sulphur (Molten)	U	F	G	U	E	U	E	-	E	E	E	-
Sulphur Dioxide	U	G	E	F	E	E	G	U	U	F	E	U
Sulphur Trioxide	U	G	E	-	E	-	-	U	U	U	E	U
Sulfuric Acid 10%	U	U	G	U	E	U	E	U	E	E	E	F
Sulfuric Acid 50%	U	U	U	U	G	U	F	U	G	E	E	U
Sulfuric Acid 93% 70˚F	U	U	U	U	U	U	U	U	U	U	E	U
Sulphurous Acid 80% 100˚F	U	U	U	U	E	U	U	U	-	G	E	U
Tannic Acid 10% 150˚F	U	F	E	G	E	-	-	U	G	G	E	F
Tar	F	E	E	E	E	E	U	U	U	U	G	U
Tartaric Acid 150˚F	U	G	E	G	E	-	-	E	E	E	-	G
Thinner	U	E	E	E	-	E	U	U	U	U	U	U
Toluol and Toluene	U	E	E	E	-	-	U	U	U	U	G	U
Tributyl Phosphate	U	F	E	-	-	-	U	U	U	G	F	F
Trichloroethylene	-	-	E	E	-	-	U	U	U	U	E	U
Tricresyl Phosphate	U	U	U	U	-	-	G	U	U	U	E	U
Triethanolamine	U	U	-	-	-	G	E	G	E	E	U	U
Turpentine	U	U	E	G	-	-	U	U	U	U	E	U
Vinegar 70˚F	U	-	E	-	E	-	G	E	G	G	E	-
Water – Demineralized	U	-	E	E	-	E	E	G	E	E	E	G
Water – Distilled	U	U	E	U	E	-	E	G	E	E	-	-
Water Fresh	F	E	E	E	E	E	E	G	E	E	-	E
Water Mineral	F	G	E	E	E	E	E	G	-	-	-	-
Water – Sewage	U	G	E	E	E	E	E	G	-	-	-	-
Whiskey and Wines	U	U	E	G	E	E	E	E	G	G	-	-
Xylene, Xylol	F	E	E	E	-	-	U	U	U	U	E	U
Zinc Chloride 5% 160˚F	U	U	F	U	G	G	E	E	E	E	E	E
Zinc Sulphate 25% 180˚F	U	G	E	E	E	G	-	E	E	E	-	-

FLANGE BOLTING DATA

Wafer type valve

Recommended stud length for tightening J Flow ControlsWafer type valve between flanges.

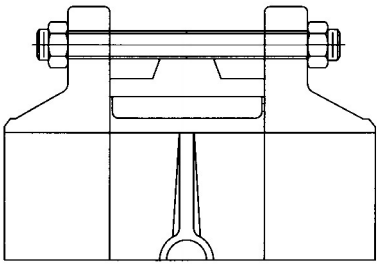

Valve size		JIS 10K flanges		DIN PN10 flanges		DIN PN16 flanges		ANSI 150 flanges	
mm	inch	Studs Dia and length (mm)	N° studs	Studs Dia and length (mm)	N° studs	Studs Dia and length (mm)	N° studs	Studs Dia and length (inch)	N° studs
50	2″	M16 X 130	4	M16 X 130	4	M16 X 130	4	5/8″ X 5-1/8″	4
65	2 1/2″	M16 X 130	4	M16 X 130	4	M16 X 130	4	5/8″ X 5-1/8″	4
80	3″	M16 X 140	8	M16 X 140	4	M16 X 140	8	5/8″ X 5-1/2"	4
100	4″	M16 X 150	8	M16 X 150	8	M16 X 150	8	5/8″ X 5-1/2"	8
125	5″	M20 X 150	8	M16 X 150	8	M16 X 150	8	3/4″ X 6-3/8″	8
150	6″	M20 X 160	8	M20 X 160	8	M20 X 160	8	3/4″ X 6-3/8″	8
200	8″	M20 X 170	12	M20 X 170	8	M20 X 170	12	3/4″ X 6-1/4″	8
250	10″	M22 X 190	12	M20 X 180	12	M24 X 190	12	7/8″ X 7-1/2″	12
300	12″	M22 X 200	16	M20 X 190	12	M24 X 200	12	7/8″ X 8-3/8″	12
350	14″	M22 X 220	16	M20 X 230	16	M24 X 220	16	1″ X 8-3/4″	12
400	16″	M24 X 240	16	M22 X 230	16	M27 X 240	16	1″ X 10″	16
450	18″	M24 X 250	20	M24 X 250	20	M27 X 250	20	1-1/8″ X 11-1/8″	16
500	20″	M24 X 280	20	M24 X 250	20	M30 X 280	20	1-1/8″ X 12″	20
600	24″	M30 X 300	24	M27 X 300	20	M33 X 300	20	1-1/4″ X 13-13/16″	20

For pipe conveying oil, the flange needs 8 studs instead of 4.

Lug type valve

Recommended screws length for tightening J Flow ControlsLug type valve between flanges

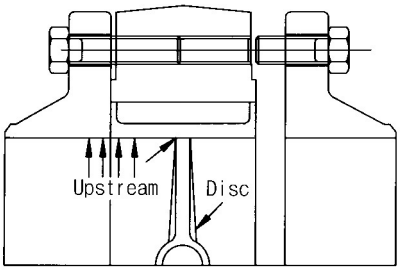

Valve size		JIS 10K flanges		DIN PN10 flanges		DIN PN16 flanges		ANSI 150 flanges	
mm	inch	Studs Dia and length (mm)	N° studs	Studs Dia and length (mm)	N° studs	Studs Dia and length (mm)	N° studs	Studs Dia and length (inch)	N° studs
50	2″	M16 X 35	8	M16 X 35	8	M16 X 35	8	5/8″ X 1-1/2″	8
65	2 1/2″	M16 X 35	8	M16 X 35	8	M16 X 35	8	5/8″ X 1-1/2″	8
80	3″	M16 X 35	16	M16 X 35	8	M16 X 35	16	5/8″ X 1-1/2″	8
100	4″	M16 X 40	16	M16 X 40	16	M16 X 40	16	5/8″ X 1-3/4″	16
125	5″	M20 X 45	16	M16 X 45	16	M16 X 45	16	3/4″ X 1-3/4″	16
150	6″	M20 X 45	16	M20 X 45	16	M20 X 45	16	3/4″ X 2″	16
200	8″	M20 X 50	24	M20 X 50	16	M20 X 50	24	3/4″ X 2-1/4″	16
250	10″	M22 X 55	24	M20 X 55	24	M24 X 55	24	7/8″ X 2-1/4″	24
300	12″	M22 X 60	32	M20 X 60	24	M24 X 60	24	7/8″ X 2-1/2″	24
350	14″	M22 X 60	32	M20 X 60	32	M24 X 60	32	1″ X 2-1/2″	24
400	16″	M24 X 70	32	M24 X 70	32	M27 X 70	32	1″ X 3-1/4″	32
450	18″	M24 X 80	40	M24 X 80	40	M27 X 80	40	1-1/8″ X 3-1/4″	32
500	20″	M24 X 80	40	M24 X 80	40	M30 X 80	40	1-1/8″ X 3-1/4″	40
600	24″	M30 X 90	48	M27 X 90	40	M33 X 90	40	1-1/4″ X 3-1/2″	40

For pipe conveying oil, the flange needs 16 screws instead of 8.

N.B - For lug type valves with free holes use the same studs as referred in wafer type valve's table.

End pipe service

Due to the particular seat perimeter, J Flow Controls Lug type butterfly valves can also be installed at the end of pipe.
That means on single flange service. In this case it is possible to remove downstream piping and make maintenance operations.
For this particular service weld neck or socket flanges are necessary. When valve is correctly installed on single flange by means of screws will have zero leakage, no fluid infiltrations between flange and seat.
We suggest not to use other types of flanges which would cause such infiltrations and make the seat slide into the body.
Lug type butterfly valves were expressly designed for this service. But they cannot intercept liquids with pressure over than 10.5bar. They are not suitable for gas or air lines on single flange service.
After having removed the downstream piping we suggest to protect the valve with a blind flange.

FLANGE BOLTING DATA

Wafer type valve

Recommended stud length for tightening J Flow Controls Wafer type valve between flanges.

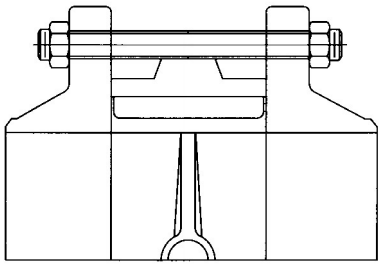

Valve size		JIS20K FLANGES		PN25 FLANGES		ANSI300 FLANGES		JIS30K FLANGES		PN40 FLANGES	
mm	inch	Studs Dia and length (mm)	N° studs	Studs Dia and length (mm)	N° studs	Studs Dia and length (inch)	N° studs	Studs Dia and length (mm)	N° studs	Studs Dia and length (mm)	N° studs
50	2"	M16 X 135	8	M16 X 135	4	5/8" X 5-3/8"	8	M16 X 135	8	M16 X 135	4
65	2 1/2"	M16 X 150	8	M16 X 150	8	3/4" X 5-7/8"	8	M20 X 150	8	M16 X 150	8
80	3"	M20 X 160	8	M16 X 160	8	3/4" X 6-3/8"	8	M20 X 160	8	M16 X 160	8
100	4"	M20 X 170	8	M20 X 170	8	3/4" X 6-3/4"	8	M22 X 170	8	M20 X 170	8
125	5"	M22 X 180	8	M24 X 180	8	3/4" X 7"	8	M22 X 180	8	M24 X 180	8
150	6"	M22 X 180	12	M24 X 180	8	3/4" X 7-1/8"	12	M24 X 180	12	M24 X 180	8
200	8"	M22 X 215	12	M24 X 215	12	7/8" X 8-1/2"	12	M24 X 215	12	M27 X 215	12
250	10"	M24 X 245	12	M27 X 245	12	1" X 9-5/8"	16	(M30 X 3) X 245	12	M30 X 245	12
300	12"	M24 X 265	16	M27 X 265	16	1-1/8" X 10-3/8"	16	(M30 X 3) X 265	16	M30 X 265	16
350	14"	(M30 X 3) X 300	16	M30 X 300	16	1-1/8" X 11-3/4"	20	(M30 X 3) X 300	16	M33 X 300	16
400	16"	(M30 X 3) X 325	16	M33 X 325	16	1-1/4" X 12-3/4"	20	(M36 X 3) X 325	16	M36 X 325	16
450	18"	(M30 X 3) X 345	20	M33 X 345	20	1-1/4" X 13-5/8"	24	-	-	-	-
500	20"	(M30 X 3) X 365	20	M33 X 365	20	1-1/4" X 14-3/8"	24	-	-	-	-
600	24"	(M36 X 3) X 415	24	M36 X 415	20	1-1/2" X 16-1/4"	24	-	-	-	-

For pipe conveying oil, the flange needs 8 studs instead of 4.

Lug type valve

Recommended screws length for tightening J Flow Controls Lug type valve between flanges

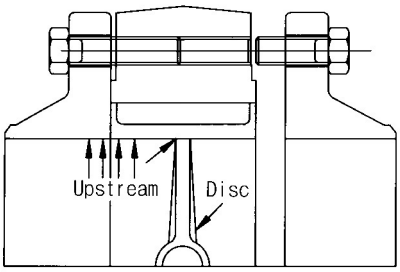

Valve size		JIS20K FLANGES		PN25 FLANGES		ANSI300 FLANGES		JIS30K FLANGES		PN40 FLANGES	
mm	inch	Studs Dia and length (mm)	N° studs	Studs Dia and length (mm)	N° studs	Studs Dia and length (inch)	N° studs	Studs Dia and length (mm)	N° studs	Studs Dia and length (mm)	N° studs
50	2"	M16 X 40	16	M16 X 40	8	5/8" X 1-1/2"	16	M16 X 40	16	M16 X 40	8
65	2 1/2"	M16 X 45	16	M16 X 45	16	3/4" X 1-3/4"	16	M20 X 45	16	M16 X 45	16
80	3"	M20 X 50	16	M16 X 50	16	3/4" X 1-3/4"	16	M20 X 50	16	M16 X 50	16
100	4"	M20 X 55	16	M20 X 55	16	3/4" X 2-1/4"	16	M22 X 55	16	M20 X 55	16
125	5"	M22 X 60	16	M24 X 60	16	3/4" X 2-1/4"	16	M22 X 60	16	M24 X 60	16
150	6"	M22 X 60	24	M24 X 60	16	3/4" X 2-1/2"	24	M24 X 60	24	M24 X 60	16
200	8"	M22 X 75	24	M24 X 75	24	7/8" X 2-7/8"	24	M24 X 75	24	M27 X 75	24
250	10"	M24 X 85	24	M27 X 85	24	1" X 3-1/4"	32	(M30 X 3) X 85	24	M30 X 85	24
300	12"	M24 X 95	32	M27 X 95	32	1-1/8" X 3-1/2"	32	(M30 X 3) X 95	32	M30 X 95	32
350	14"	(M30 X 3) X 110	32	M30 X 110	32	1-1/8" X 4-1/4"	40	(M30 X 3) X 110	32	M33 X 110	32
400	16"	(M30 X 3) X 120	32	M33 X 120	32	1-1/4" X 4-3/4"	40	(M36 X 3) X 120	32	M36 X 120	32
450	18"	(M30 X 3) X 130	40	M33 X 130	40	1-1/4" X 5-1/4"	48	-	-	-	-
500	20"	(M30 X 3) X 140	40	M33 X 140	40	1-1/4" X 5-1/2"	48	-	-	-	-
600	24"	(M36 X 3) X 155	48	M36 X 155	40	1-1/2" X 6-1/4"	48	-	-	-	-

For pipe conveying oil, the flange needs 16 screws instead of 8.

N.B - For lug type valves with free holes use the same studs as referred in wafer type valve's table.

End of pipe service

Due to the particular seat perimeter, J Flow Controls Lug type butterfly valves can also be installed at the end of pipe.
That means on single flange service. In this case it is possible to remove downstream piping and make maintenance operations.
For this particular service weld neck or socket flanges are necessary. When valve is correctly installed on single flange by means of screws will have zero leakage, no fluid infiltrations between flange and seat.
We suggest not to use other types of flanges which would cause such infiltrations and make the seat slide into the body.
Lug type butterfly valves were expressly designed for this service. But they cannot intercept liquids with pressure over than 10.5bar. They are not suitable for gas or air lines on single flange service.
After having removed the downstream piping we suggest to protect the valve with a blind flange.

BOLTING TORQUE

Recommended Bolt Tightening Torques

Ft Lbs.

Valve Size		Cennection Bolt Size	Minimum	Maximum
150 Class	2"	5/8"	20	60
	2 1/2"	5/8"	20	60
	3"	5/8"	20	60
	4"	5/8"	20	60
	5"	3/4"	30	100
	6"	3/4"	30	100
	8"	3/4"	30	100
	10"	7/8"	50	200
	12"	7/8"	50	200
	14"	1"	70	250
	16"	1"	70	250
	18"	1 1/8"	100	350
	20"	1 1/8"	100	350
	24"	1 1/4"	150	450

Ft Lbs.

Valve Size		Cennection Bolt Size	Minimum	Maximum
300 Class	2"	5/8"	20	60
	2 1/2"	3/4"	30	100
	3"	3/4"	30	100
	4"	3/4"	30	100
	5"	3/4"	30	100
	6"	3/4"	30	100
	8"	3/4"	50	200
	10"	1"	70	250
	12"	1 1/8"	100	350
	14"	1 1/8"	100	350
	16"	1 1/4"	150	450
	18"	1 1/4"	150	450
	20"	1 1/4"	150	450
	24"	1 1/2"	200	600

J Flow Controls BUTTERFLY VALVE WEIGHT LIST

STANDARD "WAFER" TYPE BUTTERFLY VALVE

(unit : kg)

Size	80			80-SR		
	Bare Shaft	W/ Lever	W/ Gear	Bare Shaft	W/ Lever	W/ Gear
2"	3.21	3.83	6.61	3.50	4.12	6.90
2.5"	4.20	4.82	7.60	4.14	4.76	7.54
3"	4.36	4.98	7.76	4.27	4.89	7.67
4"	5.82	6.44	9.28	5.24	5.86	8.70
5"	6.66	7.28	10.12	7.31	7.93	10.77
6"	8.72	9.34	12.34	7.66	8.80	12.42
8"	12.06	14.08	18.76	13.90	15.92	20.60
10"	22.32	24.34	29.50	21.16	23.18	28.34
12"	28.58	30.60	38.16	27.46	29.48	37.04
14"	38.56	-	48.00	43.11	-	52.55
16"	48.32	-	58.66	78.42	-	89.04
18"	77.72	-	88.34	86.37	-	96.71
20"	99.52	-	123.06	119.08	-	142.62
24"	184.45	-	207.99	198.45	-	221.99

STANDARD "LUG" TYPE BUTTERFLY VALVE

(unit : kg)

Size	81			81-SR		
	Bare Shaft	W/ Lever	W/ Gear	Bare Shaft	W/ Lever	W/ Gear
2"	3.62	4.24	7.02	3.46	4.08	6.86
2.5"	4.32	4.94	7.72	4.33	4.95	7.73
3"	5.62	6.24	9.02	4.64	5.26	8.04
4"	8.20	8.82	11.66	6.98	7.60	10.44
5"	8.80	9.42	12.26	8.95	9.57	12.41
6"	10.72	11.34	14.34	9.50	10.12	13.12
8"	13.48	15.50	20.18	14.64	16.66	21.34
10"	24.92	26.94	32.10	24.58	26.60	31.76
12"	32.64	34.66	42.22	36.60	38.62	46.18
14"	41.06	-	50.50	43.11	-	52.55
16"	74.69	-	85.31	88.54	-	98.88
18"	82.26	-	92.60	90.26	-	100.88
20"	113.41	-	136.95	124.75	-	148.29
24"	216.46	-	240.00	207.90	-	231.44

150 CLASS HIGH PERFORMANCE BUTTERFLY VALVE

(unit : kg)

Size	Wafer -150			Lug type -150		
	Bare Shaft	W/ Lever	W/ Gear	Bare Shaft	W/ Lever	W/ Gear
2"	4.6	5.2	8.0	4.7	5.3	8.1
2.5"	4.7	5.3	8.1	4.8	5.4	8.2
3"	4.8	5.4	8.2	4.9	5.5	8.3
4"	6.8	7.4	10.3	8.3	8.9	11.7
5"	8.5	9.1	12.0	10.5	11.1	13.9
6"	10.2	10.9	13.9	12.4	13.0	16.0
8"	16.2	18.2	22.9	18.6	20.6	25.3
10"	25.2	27.2	32.4	31.4	33.4	38.5
12"	34.7	36.7	44.3	43.5	45.6	53.1
14"	81.9	-	91.4	85.6	-	95.0
16"	108.5	-	118.8	114.4	-	124.7
18"	157.8	-	168.4	165.5	-	176.2
20"	167.7	-	191.3	177.4	-	201.0
24"	289.1	-	312.6	301.5	-	325.1

300 CLASS HIGH PERFORMANCE BUTTERFLY VALVE

(unit : kg)

Size	Wafer Type - 300			Lug Type - 300		
	Bare Shaft	W/ Lever	W/ Gear	Bare Shaft	W/ Lever	W/ Gear
2"	4.6	5.2	8.0	4.7	5.3	8.1
2.5"	4.7	5.3	8.1	4.8	5.4	8.2
3"	4.8	5.4	8.2	4.9	5.5	8.3
4"	6.8	7.4	10.3	8.3	8.9	11.7
5"	8.5	9.1	12.0	10.5	11.1	13.9
6"	10.2	10.9	13.9	12.4	13.0	16.0
8"	16.2	18.2	22.9	18.6	20.6	25.3
10"	25.2	27.2	32.4	31.4	33.4	38.5
12"	34.7	36.7	44.3	43.5	45.6	53.1
14"	81.9	-	91.4	85.6	-	95.0
16"	108.5	-	118.8	114.4	-	124.7
18"	157.8	-	168.4	165.5	-	176.2
20"	167.7	-	191.3	177.4	-	201.0
24"	289.1	-	312.6	301.5	-	325.1

4665 Interstate Drive
Cincinnati, OH 45246
513-731-2900
jflowcontrols.com