JFLOW CONTROLS®

STANDARDS

- Body Rating: ANSI Class 150#, 300#, 600#, 900#, 1500#; ISO/DIN PN 10, `6, 25, 40, 64, 100; JIS 10K, 20K, 30K, 40K, 63K
- Face-to-Face: Category A, ISO 5752 Series 20
- Testing: MSS SP-61, BS 6755
- Actuator Directing Mounting: ISO 5211

J Flow Controls 89 Series

Cryogenic Butterfly Valve

FEATURES & BENEFITS

- Valve size: 2" - 64"
- Bonnet Type: Plain, Extension, Cryogenic
- Max Working Temperature: up to 1112°F, Cryogenic range -320°F
- End Connection: Wafer, Lugged, Flange, Butt Weld
- Seat Construction:
  - Soft Seat: Blowout proof stem design, lower operating torque, bi-directional application, leakage Class VI
  - Metal Seat: Blowout proof stem design, inherent fire safe design, suitable for high temperature, leakage Class V
  - Fire Safety: blowout proof stem design, inherent fire safe design, suitable for high temperature, leakage Class VI, special coating

APPLICATIONS & INDUSTRIES

- Construction
- Chemical/Petrochemical
- Liquefied Gas/Refrigeration
- Heavy Industrial
- Power/Generation Plants
- Steel and Iron Works
- Commercial
- Oil Refineries and Oil Field
- Ship Building
- Local Area Energy Supply

CRYOGENIC TESTING CAPABILITIES

Moisture from the atmosphere condenses on cold surfaces and, where the temperature of the surface is below freezing, the moisture will freeze into a layer of frost. As this frost and ice forms on the bonnet and stem area of control valves, and as the stem is stroked by the actuator, the layer of frost on the stem is drawn through the packing causing tears and loss of seal.

The solution is to use Extension Bonnets which allow the packing box area of the control valve to be warmed by ambient temperatures, thus preventing frost from forming on the stem and packing box areas. The length of the extension bonnet depends on the application temperature and insulation requirements. The colder the application, the longer the extension bonnet required.

Materials of construction for cryogenic applications are generally CF8M body and bonnet material with 300 Series stainless steel trim material.

CV VALUES

Valve Size	Throttling 60	On-off 90
3"	160	320
4"	280	560
5"	450	900
6"	640	1280
8"	1150	2300
10"	1780	3560
12"	2600	5200
14"	3400	6800
16"	4500	9000
18"	5600	11200
20"	7000	14000
24"	12000	24000

CHARACTERISTIC CURVES

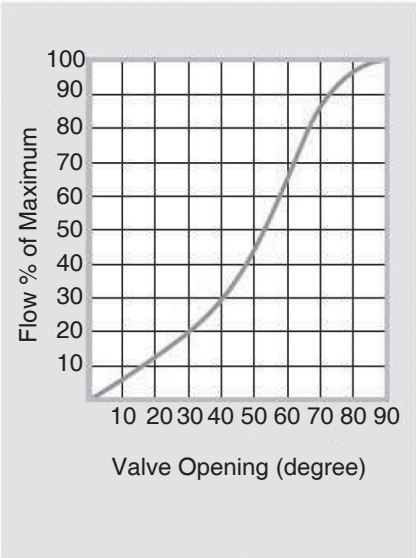

DISC FRICTION

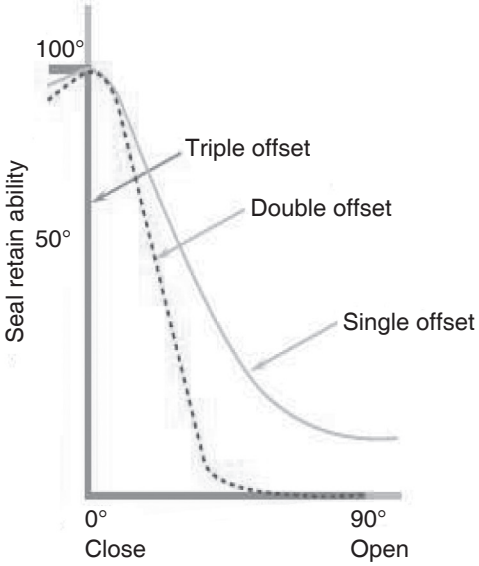

PRESSURE/TEMPERATURE CHARTS

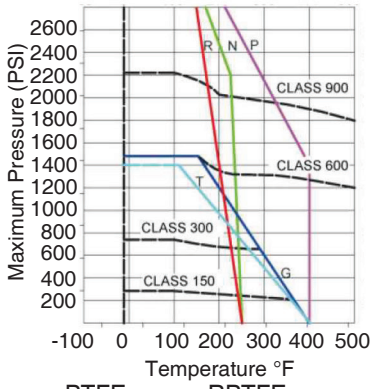

T -- PTFE G -- RPTFE R -- DELRIN
N -- NYLON P -- PEEK

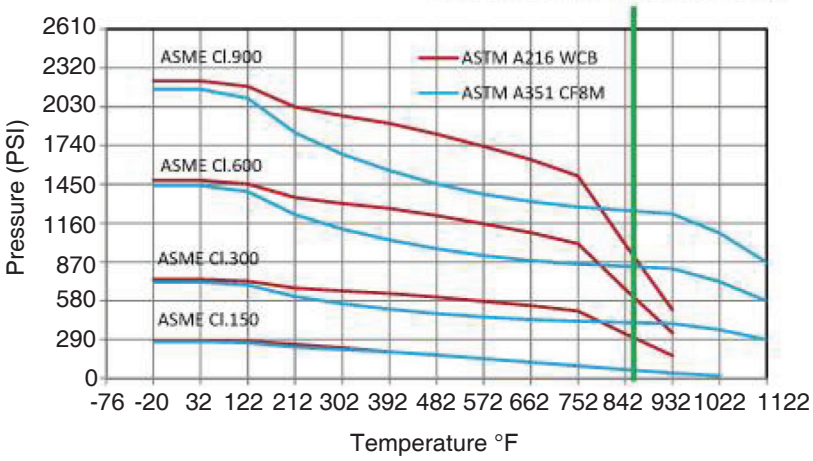

PARTS IDENTIFICATION

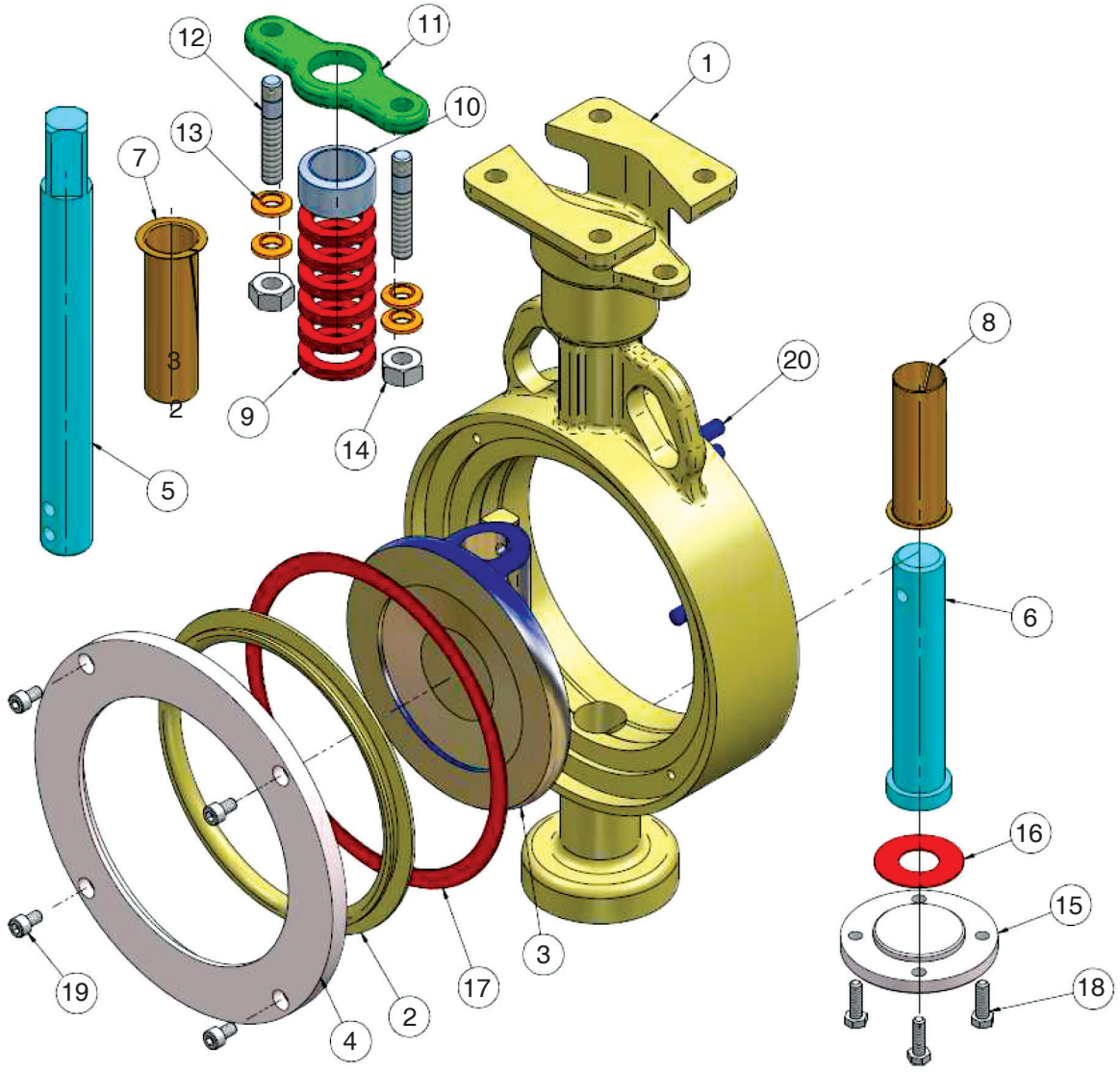

No	Parts Name	Materials	No	Parts Name	Materials
1	Body	WCB, SCS 13, SCS 14	11	Gland Flange	SUS 304
2	Seat	SUS 304, SUS 316, PTFE	12	Gland Bolt	STD
3	Disc	SUS 304, SUS 316	13	Coned Disc Spring	SUS 304
4	Retainer	SUS 304	14	HEX Nut	SUS 304
5	Drive Stem	SUS 304, SUS 316	15	Bottom Cover	SUS 304
6	Bottom Stem	SUS 304, SUS 316	16	Bottom Cover Gasket	Non Asbestos
7	Upper Flange Bush	SUS 316	17	Gasket	Non Asbestos
8	Lower Flange Bush	SUS 316	18	HEX Head Bolt	STD
9	Packing	PTFE Graphite	19	HEX Socket Head Bolt	STD
10	Gland Follower	SUS 304	20	Taper Pin	SUS 304

ACTUATOR SIZING

Valve Size	Seat Material	150# (JIS 10K)		300# (JIS 20K)	
		Spring Return	Double Acting	Spring Return	Double Acting
3"	Metal	AS60	AD50	AS60	AD60
	Soft	AS60	AD50	AS60	AD60
4"	Metal	AS60	AD50	AS60	AD60
	Soft	AS60	AD60	AS60	AD60
5"	Metal	AS80	AD60	AS80	AD80
	Soft	AS80	AD60	AS80	AD80
6"	Metal	AS100	AD80	AS100	AD80
	Soft	AS100	AD80	AS100	AD80
8"	Metal	AS125	AD100	AS125	AD100
	Soft	AS100	AD80	AS125	AD100
10"	Metal	AS125	AD100	AS140	AD125
	Soft	AS125	AD100	AS140	AD125
12"	Metal	AS140	AD125	AS160	AD140
	Soft	AS140	AD125	AS160	AD140
14"	Metal	AS160	AD140	AS200	AD160
	Soft	AS160	AD140	AS200	AD160
16"	Metal	AS200	AD160	AS200	AD160
	Soft	AS200	AD160	AS200	AD160
18"	Metal	AS250	AD200	AS250	AD200
	Soft	AS250	AD200	AS250	AD200
20"	Metal	AS250	AD200	AS300	AD250
	Soft	AS250	AD200	AS300	AD250
24"	Metal	AS300	AD250	AS300	AD250
	Soft	AS300	AD250	AS300	AD250
28"	Metal	AS350	AD300	AS350	AD300
	Soft	AS350	AD300	AS350	AD300
32"	Metal	AS350	AD300	AS350	AD300
	Soft	AS350	AD300	AS350	AD300

DIMENSIONS - WAFER STYLE

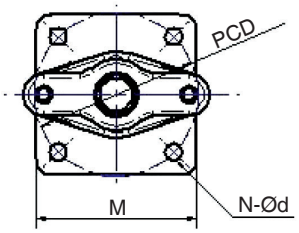

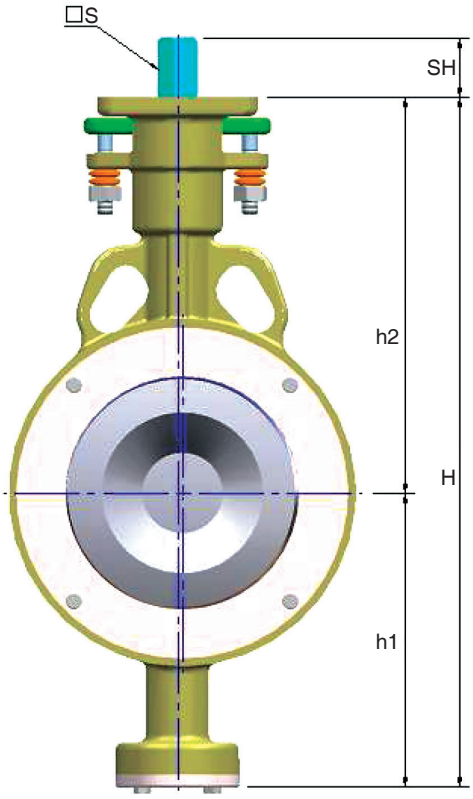

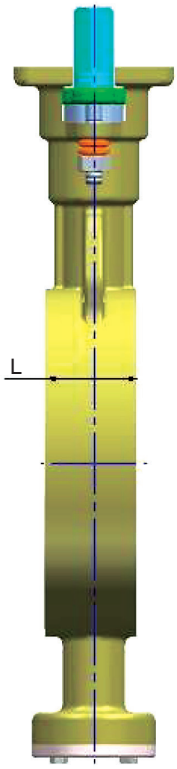

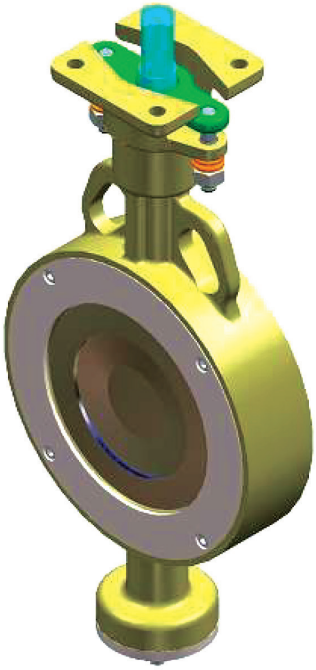

Size	Dimensions														
	L			H1	Plain		□S	SH	Mounting Pad			Extension		Cryogenic	
	150#	300#	600#		h2	H			□M	PCD	N-Ød	h2	H	h2	H
3"	1.89	1.89	2.13	5.12	6.10	11.2	0.43	0.55	2.76	2.76	0.16-Ø0.43	12.0	17.1	27.8	32.9
4"	2.13	2.13	2.52	6.22	7.09	13.3	0.43	0.55	2.76	2.76	0.16-Ø0.43	13.0	19.2	28.7	35.0
5"	2.20	2.32	2.76	7.13	7.87	15.0	0.55	0.67	3.62	4.02	0.16-Ø0.51	13.8	20.9	29.5	36.7
6"	2.24	2.32	3.07	7.40	9.61	17.0	0.67	0.79	3.62	4.02	0.16-Ø0.51	15.5	22.9	31.3	38.7
8"	2.52	2.87	4.02	8.27	10.4	18.7	0.67	0.79	4.33	4.02	0.16-Ø0.51	16.3	24.6	32.1	40.4
10"	2.80	3.27	4.61	10.4	11.7	22.1	0.87	0.98	4.33	4.02	0.16-Ø0.51	17.6	28.0	33.3	43.8
12"	3.19	3.62	5.51	12.0	13.7	25.7	1.06	1.18	5.51	5.51	0.16-Ø0.75	19.7	31.6	35.4	47.4
14"	3.62	4.61	6.10	12.7	14.2	26.9	1.06	1.18	5.51	5.51	0.16-Ø0.75	20.1	32.8	35.9	48.5
16"	4.02	5.24	7.01	13.9	17.4	31.3	1.42	1.54	6.50	6.50	0.16-Ø0.91	23.3	37.2	39.1	53.0
18"	4.49	5.87	7.87	15.3	18.6	33.9	1.42	1.54	6.50	6.50	0.16-Ø0.91	24.5	39.8	40.2	55.5
20"	5.00	6.26	8.50	16.4	19.9	36.3	1.42	1.54	Ø11.8	10.0	0.31-Ø0.75	25.8	42.2	41.6	58.0
24"	6.06	7.13	9.13	18.4	20.9	39.3	1.81	1.93	Ø11.8	10.0	0.31-Ø0.75	26.8	45.2	42.5	61.0

DIMENSIONS - LUG STYLE

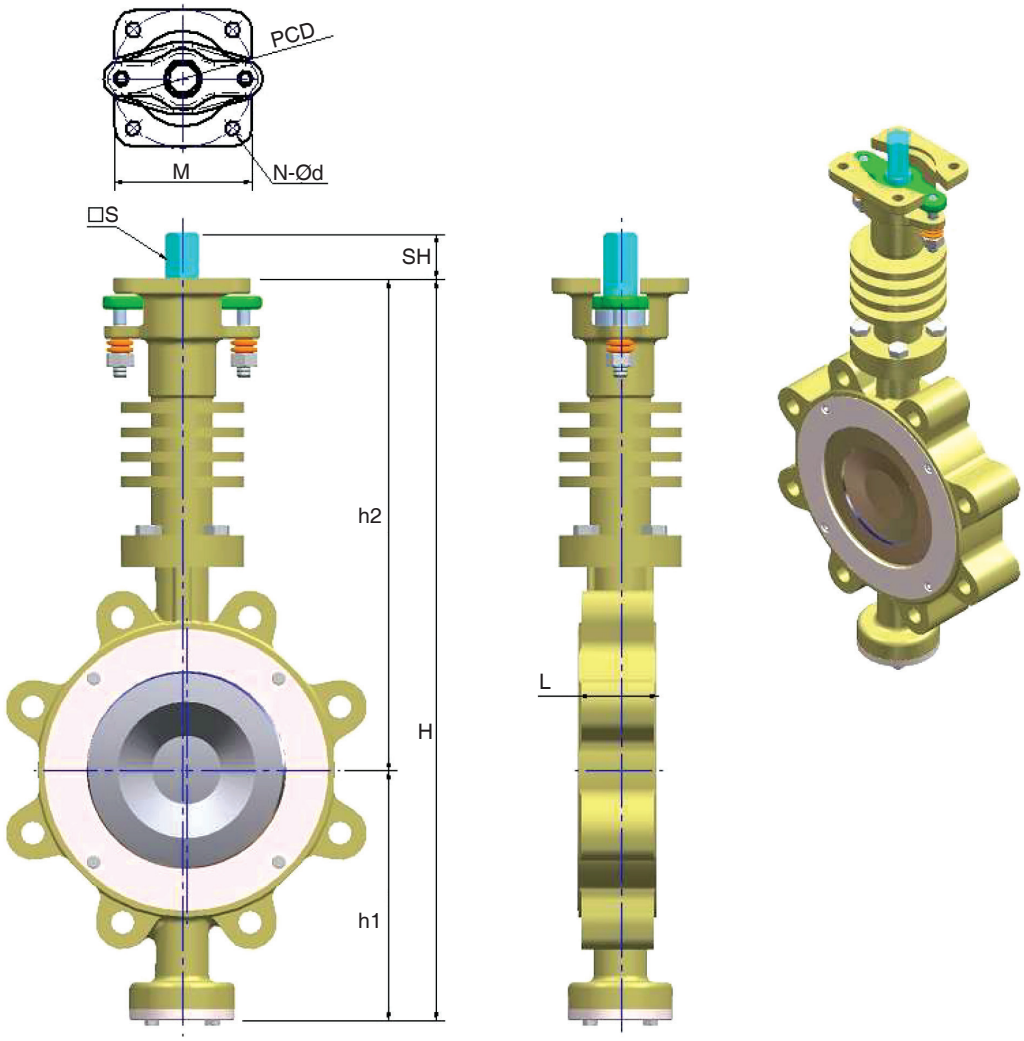

Size	Dimensions														
	L			H1	Plain		□S	SH	Mounting Pad			Extension		Cryogenic	
	150#	300#	600#		h2	H			□M	PCD	N-Ød	h2	H	h2	H
3"	1.89	1.89	2.13	5.12	6.10	11.2	0.43	0.55	2.76	2.76	0.16-Ø0.43	12.0	17.1	27.8	32.9
4"	2.13	2.13	2.52	6.22	7.09	13.3	0.43	0.55	2.76	2.76	0.16-Ø0.43	13.0	19.2	28.7	35.0
5"	2.20	2.32	2.76	7.13	7.87	15.0	0.55	0.67	3.62	4.02	0.16-Ø0.51	13.8	20.9	29.5	36.7
6"	2.24	2.32	3.07	7.40	9.61	17.0	0.67	0.79	3.62	4.02	0.16-Ø0.51	15.5	22.9	31.3	38.7
8"	2.52	2.87	4.02	8.27	10.4	18.7	0.67	0.79	4.33	4.02	0.16-Ø0.51	16.3	24.6	32.1	40.4
10"	2.80	3.27	4.61	10.4	11.7	22.1	0.87	0.98	4.33	4.02	0.16-Ø0.51	17.6	28.0	33.3	43.8
12"	3.19	3.62	5.51	12.0	13.7	25.7	1.06	1.18	5.51	5.51	0.16-Ø0.75	19.7	31.6	35.4	47.4
14"	3.62	4.61	6.10	12.7	14.2	26.9	1.06	1.18	5.51	5.51	0.16-Ø0.75	20.1	32.8	35.9	48.5
16"	4.02	5.24	7.01	13.9	17.4	31.3	1.42	1.54	6.50	6.50	0.16-Ø0.91	23.3	37.2	39.1	53.0
18"	4.49	5.87	7.87	15.3	18.6	33.9	1.42	1.54	6.50	6.50	0.16-Ø0.91	24.5	39.8	40.2	55.5
20"	5.00	6.26	8.50	16.4	19.9	36.3	1.42	1.54	Ø11.8	10.0	0.31-Ø0.75	25.8	42.2	41.6	58.0
24"	6.06	7.13	9.13	18.4	20.9	39.3	1.81	1.93	Ø11.8	10.0	0.31-Ø0.75	26.8	45.2	42.5	61.0

DIMENSIONS- FLANGE STYLE, SHORT PATTERN

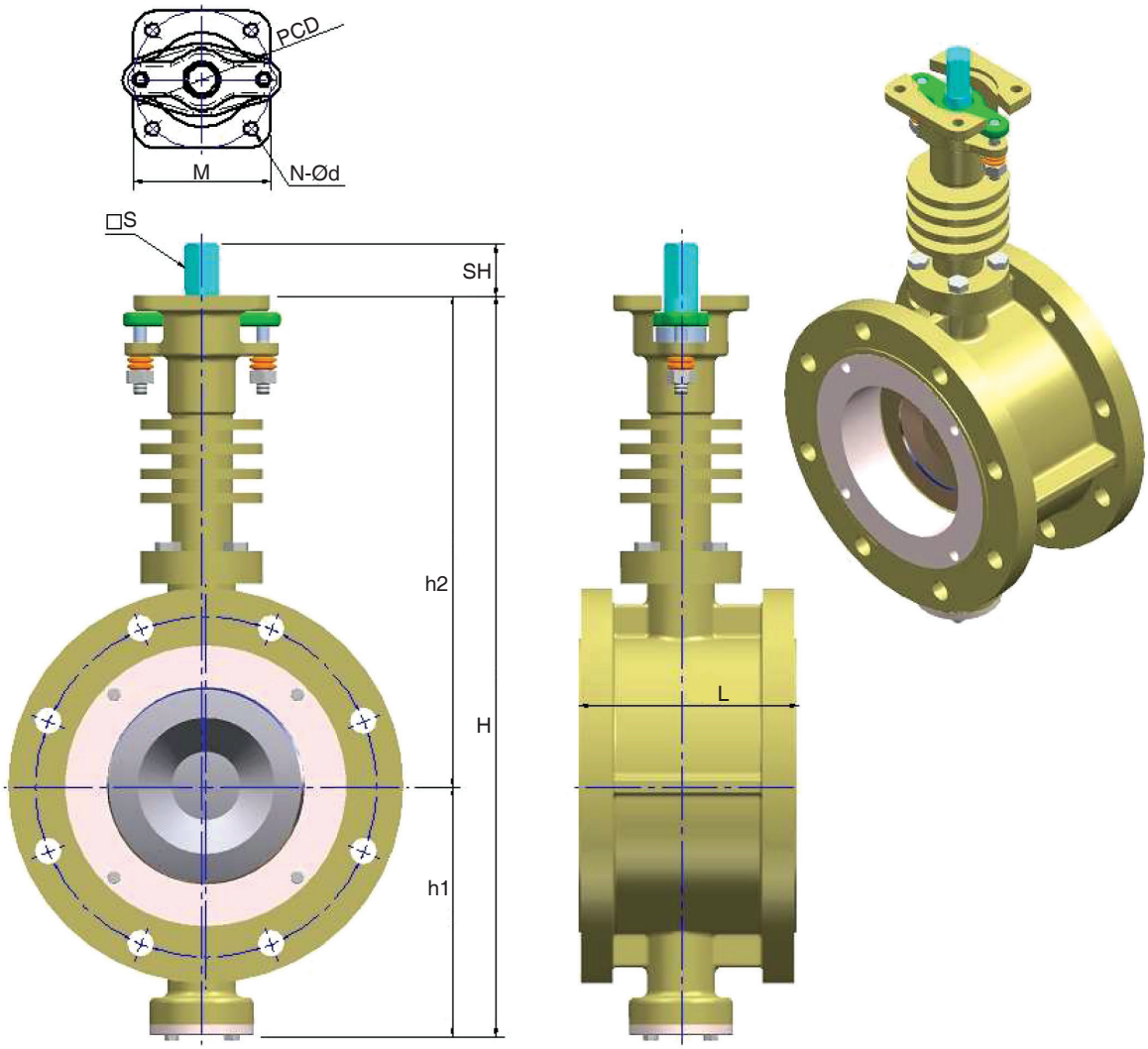

Size	Dimensions														
	L			H1	Plain		□S	SH	Mounting Pad			Extension		Cryogenic	
	150#	300#	600#		h2	H			□M	PCD	N-Ød	h2	H	h2	H
3"	4.49	4.49	7.09	5.12	6.10	11.2	0.43	0.55	2.76	2.76	0.16-Ø0.43	12.0	17.1	27.8	32.9
4"	5.00	5.00	7.52	6.22	7.09	13.3	0.43	0.55	2.76	2.76	0.16-Ø0.43	13.0	19.2	28.7	35.0
5"	5.51	5.51	7.87	7.13	7.87	15.0	0.55	0.67	3.62	4.02	0.16-Ø0.51	13.8	20.9	29.5	36.7
6"	5.51	5.51	8.27	7.40	9.61	17.0	0.67	0.79	3.62	4.02	0.16-Ø0.51	15.5	22.9	31.3	38.7
8"	5.98	5.98	9.06	8.27	10.4	18.7	0.67	0.79	4.33	4.02	0.16-Ø0.51	16.3	24.6	32.1	40.4
10"	6.50	6.50	9.80	10.4	11.7	22.1	0.87	0.98	4.33	4.02	0.16-Ø0.51	17.6	28.0	33.3	43.8
12"	7.01	7.01	10.6	12.0	13.7	25.7	1.06	1.18	5.51	5.51	0.16-Ø0.75	19.7	31.6	35.4	47.4
14"	7.52	7.52	11.4	12.7	14.2	26.9	1.06	1.18	5.51	5.51	0.16-Ø0.75	20.1	32.8	35.9	48.5
16"	8.50	8.50	12.2	13.9	17.4	31.3	1.42	1.54	6.50	6.50	0.16-Ø0.91	23.3	37.2	39.1	53.0
18"	8.74	8.74	13.0	15.3	18.6	33.9	1.42	1.54	6.50	6.50	0.16-Ø0.91	24.5	39.8	40.2	55.5
20"	9.02	9.02	13.8	16.4	19.9	36.3	1.42	1.54	Ø11.8	10.0	0.31-Ø0.75	25.8	42.2	41.6	58.0
24"	10.5	10.5	15.4	18.4	20.9	39.3	1.81	1.93	Ø11.8	10.0	0.31-Ø0.75	26.8	45.2	42.5	61.0

DIMENSIONS - FLANGE STYLE, LONG PATTERN

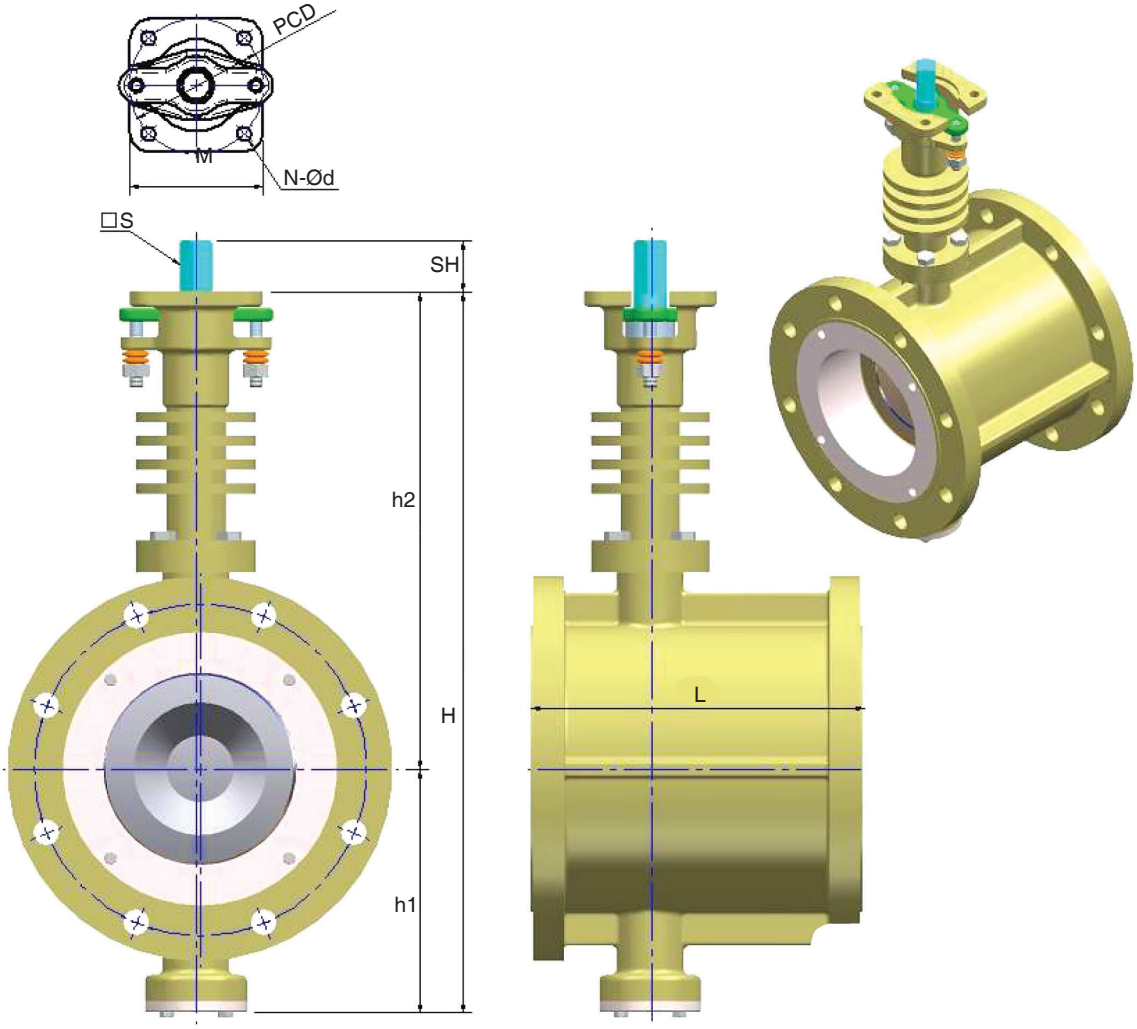

Size	Dimensions														
	L			H1	Plain		□S	SH	Mounting Pad			Extension		Cryogenic	
	150#	300#	600#		h2	H			□M	PCD	N-Ød	h2	H	h2	H
3"	7.99	11.1	14.0	5.12	6.10	11.2	0.43	0.55	2.76	2.76	0.16-Ø0.43	12.0	17.1	27.8	32.9
4"	9.02	12.0	17.0	6.22	7.09	13.3	0.43	0.55	2.76	2.76	0.16-Ø0.43	13.0	19.2	28.7	35.0
5"	10.0	15.0	20.0	7.13	7.87	15.0	0.55	0.67	3.62	4.02	0.16-Ø0.51	13.8	20.9	29.5	36.7
6"	10.5	15.9	22.0	7.40	9.61	17.0	0.67	0.79	3.62	4.02	0.16-Ø0.51	15.5	22.9	31.3	38.7
8"	11.5	16.5	26.0	8.27	10.4	18.7	0.67	0.79	4.33	4.02	0.16-Ø0.51	16.3	24.6	32.1	40.4
10"	13.0	18.0	31.0	10.4	11.7	22.1	0.87	0.98	4.33	4.02	0.16-Ø0.51	17.6	28.0	33.3	43.8
12"	14.0	19.8	33.0	12.0	13.7	25.7	1.06	1.18	5.51	5.51	0.16-Ø0.75	19.7	31.6	35.4	47.4
14"	15.0	30.0	35.0	12.7	14.2	26.9	1.06	1.18	5.51	5.51	0.16-Ø0.75	20.1	32.8	35.9	48.5
16"	16.0	33.0	39.0	13.9	17.4	31.3	1.42	1.54	6.50	6.50	0.16-Ø0.91	23.3	37.2	39.1	53.0
18"	17.0	36.0	43.0	15.3	18.6	33.9	1.42	1.54	6.50	6.50	0.16-Ø0.91	24.5	39.8	40.2	55.5
20"	18.0	39.0	47.0	16.4	19.9	36.3	1.42	1.54	Ø11.8	10.0	0.31-Ø0.75	25.8	42.2	41.6	58.0
24"	20.0	45.0	55.0	18.4	20.9	39.3	1.81	1.93	Ø11.8	10.0	0.31-Ø0.75	26.8	45.2	42.5	61.0

DIMENSIONS- BUTT WELD STYLE

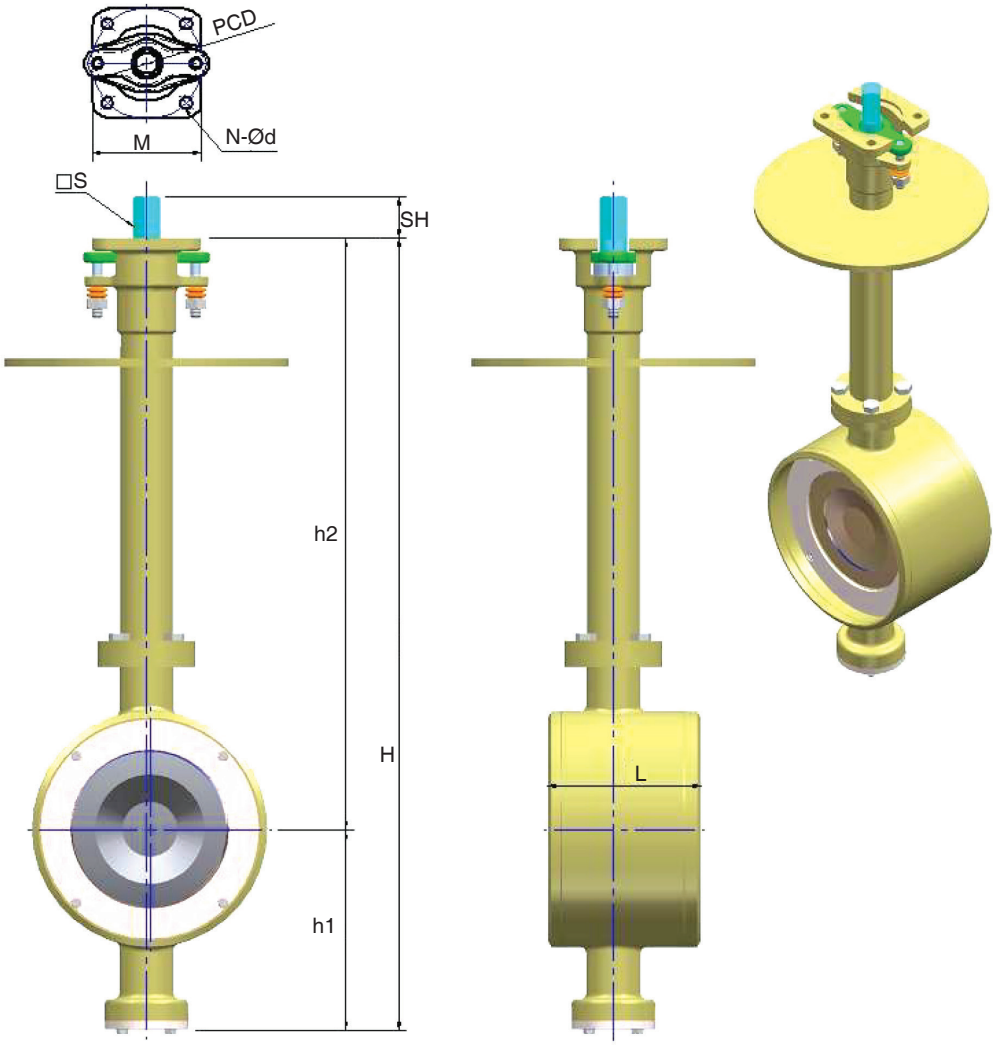

Size	Dimensions													
	L		H1	Plain		S □	SH	Mounting Pad			Extension		Cryogenic	
	150#	300#		h2	H			M□	PCD	N-Ød	h2	H	h2	H
3"	4.49	4.49	5.12	6.10	11.2	0.43	0.55	2.76	2.76	0.16-Ø0.43	12.0	17.1	27.8	32.9
4"	5.00	5.00	6.22	7.09	13.3	0.43	0.55	2.76	2.76	0.16-Ø0.43	13.0	19.2	28.7	35.0
5"	5.51	5.51	7.13	7.87	15.0	0.55	0.67	3.62	4.02	0.16-Ø0.51	13.8	20.9	29.5	36.7
6"	5.51	5.51	7.40	9.61	17.0	0.67	0.79	3.62	4.02	0.16-Ø0.51	15.5	22.9	31.3	38.7
8"	5.98	5.98	8.27	10.4	18.7	0.67	0.79	4.33	4.02	0.16-Ø0.51	16.3	24.6	32.1	40.4
10"	6.50	6.50	10.4	11.7	22.1	0.87	0.98	4.33	4.02	0.16-Ø0.51	17.6	28.0	33.3	43.8
12"	7.01	7.01	12.0	13.7	25.7	1.06	1.18	5.51	5.51	0.16-Ø0.75	19.7	31.6	35.4	47.4
14"	7.52	7.52	12.7	14.2	26.9	1.06	1.18	5.51	5.51	0.16-Ø0.75	20.1	32.8	35.9	48.5
16"	8.50	8.50	13.9	17.4	31.3	1.42	1.54	6.50	6.50	0.16-Ø0.91	23.3	37.2	39.1	53.0
18"	8.74	8.74	15.3	18.6	33.9	1.42	1.54	6.50	6.50	0.16-Ø0.91	24.5	39.8	40.2	55.5
20"	9.02	9.02	16.4	19.9	36.3	1.42	1.54	Ø11.8	10.0	0.31-Ø0.75	25.8	42.2	41.6	58.0
24"	10.5	10.5	18.4	20.9	39.3	1.81	1.93	Ø11.8	10.0	0.31-Ø0.75	26.8	45.2	42.5	61.0

J Flow Controls®
4665 Interstate Drive
Cincinnati, OH 45246
513-731-2900
jflowcontrols.com