JFLOW CONTROLS

SPECIFICATION DATA
041020

SERIES 2000

UNBALANCE TYPE GLOBE CONTROL VALVE

COMPREHENSIVE RANGE OF VALVES FOR THE ENERGY & PROCESS INDUSTRIES

4665 Interstate Drive Cincinnati, OH 45246
513-731-2900
jflowcontrols.com

CONTENTS

MAIN PRODUCT FEATURE

- The 2000 Series product is a non-balancing control valve. Top guiding structure allows for reduced friction and fewer disturbances in the fluid process.
- The design of the reinforced guiding area ensures stable fluid control and low vibration.
- The standardized and self-aligning stem guide is installed without any tools during disassembly and maintenace
- The Intergral structure of the plug and seat are designed as standard type, and severe conditions type (low noise and cavitation elimination). The design maximizes performance and greater resistance to cavitation noise reduction. A simple cage (trim) replacement to meet the requirements of different working conditions
- The packing box is designed for tight sealing for multi-level protection, which meets the stringent demands for a safe and relaible seal against any media.
- The packing box system is additionally protected with a dust cover to effectively prevent dust and other particals from entering into the packing area.
- The 2000 Series body is completely interchangeable with that of the 4000 Series cage guided, and the inline replacement of trims and trim styles. Making trim options and changes simple.
- The pressure parts are designed in accordance with ASME nuclear power level standard, and more applicable to severe working conditions.

2000 SERIES SINGLE SEAT CONTROL VALVE

- The 2000 Series single seat control valve uses a high performance top guiding through advanced technology.

  This series uses a simple and reliable top guiding design which provides reliable performance in use. The ridgid valve cage can effectively prevent the body from being damaged by flash evaporation and cavitation. This valve can widley be used for water, steam, and gas applications to satisfy the many requirements of design standards. The valve is designed with features for small volumne , small pressure drop loss, large flow, wide rangeability, high precision flow charictaristic curve, and low leakage. This product can be widely used in applications where the required seat leakage is low, and the differential pressure is relatively small.

- The top guided control valve is coupled with our new generation high performance multi-spring diaphragm actuator as a standard. With a compact structure and large output force, it is suitable for controlling various media of different pressure and temperatures.

BODY STYLES

Globe Body

Globe style bodies feature smooth, streamlined, constant -area internal passages with no pockets, permitting high capacity with minimum turbulence. They are designed with a constant wall thickness, providing lower weight and cost when manufactured in expensive stainless or alloy steels.

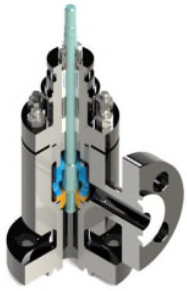

Angle Body

The angle-style valve is completely interchangeable with the globe style-all other valve parts remain the same. For additional body protection, extending to the outlet flange, is available.

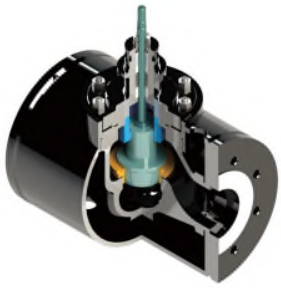

Jacket Body

The jacket valve uses a standard globe body with oversized, blind flanges for a full jacket of standard flanges for a partial jacket. The jacket is equipped with drain connection.

BONNET TYPES

Standard bonnet - enables the forming of a deep packing box, together with a longer guide. Providing a robust and vibration resistant assembly. TFM1600 rings are used in the standard packing up to 480F (250C).

Extended bonnet - protects the packing from excessive temperature variables, both hot and cold, which may adversely affect valve and packing performance. Application temperature range depends upon valve and bonnet construction materials.

STANDARD BONNET

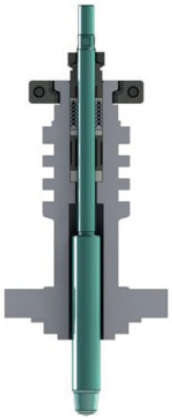

EXTENSION BONNET

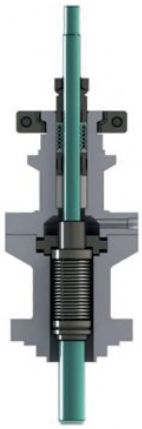

BELLOWS BONNET

CRYOGENIC BONNET

Bellows Bonnet- provides for a positive metalic gland seal within the rated pressure and temperature of the bellows material selected. This bonnet is used for hazardous, lethal service with auxiliary packing box in the upper bonnet to serve as a back up seal.

Extension Bonnet- protects the packing from the extremes of temperature changes produced by the line process media. Normal constructed in Stainless Steel to operate in cold applications to -320F (196C).

Higher Temperatures in varying materials to 1562F (850C)

TRIM DESIGNS

General Service
Contoured Plug

Low Noise Trim
Multi Hole – Multi Cage

Anti-Cavitation Service
Multi-Step Plug

Anti-Cavitation Chanel Trim
Multi Hole – Multi Cage

Min. Flow Control Service
V-Notch Split Plug

Contoured Trim - as shown

The contoured plug is designed with a specially profiled valve plug head. The plug head profile determines the flow characteristic through the valve, and offers a smooth profile to the flow leading to a high pressure recovery. The trim is most suited to low pressure drop application and is used in the majority of control applications.

- Single & Double-Stage Low Noise and Anti-Cavitation Trim
- Quick Change or Threaded Seat Rings
- Equal Percentage & Linear Contours
- Hardened Trim Standard Stellited Trim
- Reduced Capacities & Micro flow Trim (V-Notch Split Plug)
- Soft Seat Design

Contoured Trim Soft Faced

A variation of the standard contoured plug is the soft faced option. The plug head is manufactured with a clamped on shroud which locks the soft faced ring in position. When the soft face contacts the seating point it deforms the softer ring ensuring a high degree of closure. The soft faced plug is used on applications where bubble tight shut off is required.

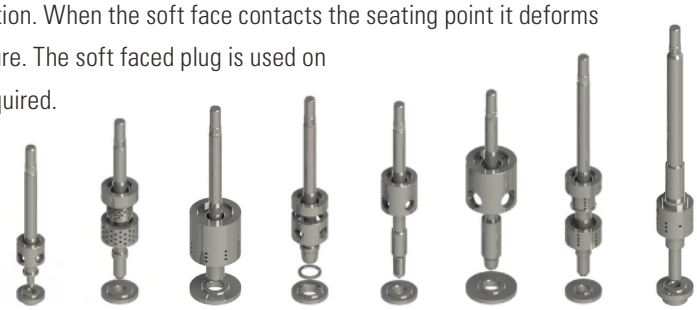

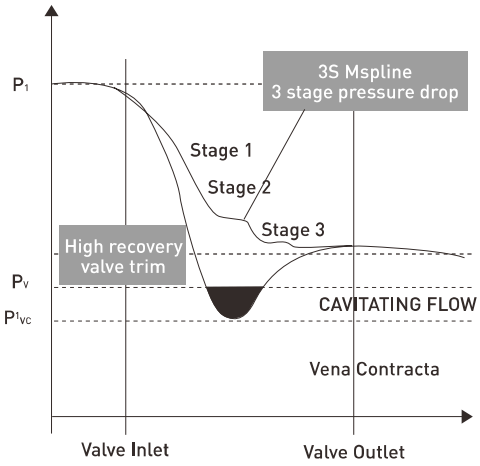

Multi-Step Trim

The trim design presented below is a Multi-Step trim.
There are multi- Stage designs available depending on pressure drop and potential for cavitation. The fluid passes through the flow path generated by incorporating angled flats onto the surface of the plug, together with a cut out on the internal diameter of the seat. The pressure drop is apportioned across the stages of letdown so that the pressure drop progressively reduces as it passes through the stages of the trim. This gives excellent resistance to cavitation on high pressure drop applications.

Microflow Trim

Instability problems. This trim design has an inherent flow characteristic of Mod. EQ%, and has excellent rangeability. It is an ideal selection for the control of very low flow rates. For very high pressure drop applications, or flows which would potentially cavitation there are multi-stage options of this design(5 stages maximum), and there are also tungsten carbide and advanced ceramic options for pressure drops greater than 100 bar (1400 psi).
The illustration below represents a single stage design. The flow is controlled by one or more flutes machined into a parallel plug nose. In order to achieve the very low flow control and high rangeability, the plug and seat are manufactured as matched pairs to give a 'gravity slide fit '.

RATED Cv VALUE AND STROKE

- Min Flow Control Service: V-Notch Split Plug -

Orifice Diameter	1/4 in									
	6.4 mm									
Stroke	20 mm									
Cv	0.003	0.004	0.007	0.01	0.015	0.02	0.03	0.04	0.06	0.08

- Anti-Cavitation Service- Mutli-Step Plug -

Orifice Diameter	5/16 in	3/8 in	1/2 in	5/8 in	3/4 in
	8 mm	10 mm	12.7 mm	16 mm	20 mm
Stroke	20 mm				
Cv	0.1 ~ 0.3	0.4 ~ 0.6	0.6 ~ 0.8	1.2 ~ 1.8	2 ~ 3

- Contoured Plug Type Trim -

Trim Size		**Trim Type**		
		Contoured Plug		
inch	**mm**	**EQ-%**	**Linear**	**Quick Open**
5/32 in	4	0.3	0.3	0.4
1/4 in	6	0.8	0.8	1
3/8 in	9	1.8	1.8	2.3
1/2 in	13	3.2	3.2	4
5/8 in	16	5.2	5.2	6
3/4 in	19	7	7	9
1 in	22	12	12	16
1-1/4 in	32	20	20	25
1-1/2 in	37	28	28	33
2 in	47	50	50	60
2-1/2 in	62	70	70	80
3 in	77	110	110	132
4 in	97	160	180	210
5 in	127	280	300	320
6 in	147	360	400	430

- Window Cage and Multi Hole Cage Type Trim -

Trim Size (Inches)	Stroke (mm)	Cage (Window)			1-Stage Drilled Hole		2-Stage Drilled Hole		3-Stage Drilled Hole	
		Quick Opening	Linear	EQ-%	Linear	EQ-%	Linear	EQ-%	Linear	EQ-%
5/32″	10	0.4	0.3							
1/4″	20	1	0.8							
3/8″	20	2.3	1.8							
1/2″	20	4	3.2							
5/8″	20	6	5.2		5.2	5.2	5.2	5.2	5.2	5.2
3/4″	20	9	7		7	7	7	7	7	6
1″	20	16	12		12	12	10	9	9	8
1-1/4″	20	25	20		20	17				
	30						20	17	18	16
1-1/2″	20	33	28		26	22				
	30						25	21	22	20
2″	30	60	50		48	42				
	40						44	38	40	35
2-1/2″	30	80	70		66	58				
	40						75	60	70	55
3″	40	132	110		100	90	90	70	75	60
4″	40	210	180	160	150	130	120	94	110	90
5″	60	320	300	280	270	230	230	180	210	160
6″	60	430	400	360	340	290	280	210	250	190
7″	80	660	580	520	500	430	430	330	400	300
8″	80	860	720	640	600	520				
	90						540	420	500	380
9″	90	1000	900	800	780	600				
	100						690	540	640	490
10″	100	1400	1200	1100	940	800	780	600	720	540
12″	120	1900	1600	1400	1400	1200	1100	850	1000	760
14″	150	2760	2300	2000	1900	1700	1600	1300	1400	1100
16″	150	3300	2800	2400	2300	2000	1900	1500	1700	1300
18″	200	4560	3800	3400	3300	2800	2700	2200	2500	2000

Note! Trim size is variable per class rating.

FLOW CHARACTERISTICS

The flow characteristic describes the relationship between the flow coefficient and the valve stroke. It is inherent to the design of the selected valve. For example, as the valve is opened, the flow characteristic allows a certain amount of flow through the valve at a particular percentage of the stroke. This is especially important for throttle control because it controls the flow in a predictable manner. The flow rate is affected by the flow characteristic as well as the pressure drop. Inherent flow characteristic is when the valve is operating with a constant pressure drop without taking into account the effects of piping. Installed flow characteristics consider both the valve and piping effects. This is also considered an ideal curve and takes the entire system into account.

Equal Percentange

Equal percentage is the characteristic most commonly used in process control. The change in flow per unit of valve stroke is directly proportional to the flow occurring just before the change is made. While the flow characteristic of the valve itself may be equal percentage, most control loops will produce an installed characteristic approaching linear when the overall system pressure drop is large relative to that across the valve.

Linear

An inherently linear characteristic produces equal changes in flow per unit of valve stroke regardless of plug position. Linear plugs are used on those systems where the valve pressure drop is a major portion of the total system pressure drop.

Quick-Opening

Quick opening flow is characterized by the maximum flow produced immediately as the valve begins to open. It is only used for on-off applications and due to the extreme nature of the flow, the inherent and installed characteristics are similar.

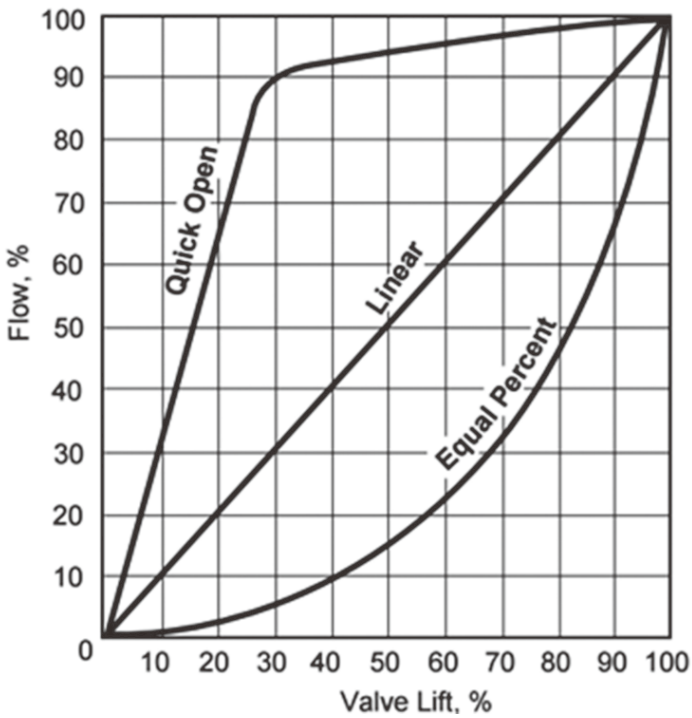

Inherent Flow Curves for Various Valve Plugs

STANDARD BODY SPECIFICATION

Basic Design Standard: ANSI B16.34

BODY TYPE	Straight way globe valve
BONNET TYPE	Plain (Standard) Type Fin & Extension Type Bellows Seal Type Long Extension (Cryogenic Service) Typ e
NOMINAL SIZE	1/2" to 6" (DN 15 to 150)
PRESSURE RATING	ANSI 150LBS to 2500LBS, JIS 10K to 180K, PN20 to PN420 (Option : 4500 LBS)
OPERATING PRESSURE RANGE	Up to 6,171psi (g), Up to 434 Kg/cm² (g)
END CONNECTION	Socket Weld – ANSI B16.11 Butt Weld – ANSI B 16.25 FF/RF/RTJ Flange – ANSI B 16.5 Connection B Option : JIS Flange, DIN Flange, NPT/PT Screw
FACE TO FACE DIMENSION	In Accordance with ANSI/ISA S75.12~16
MATERIAL	Carbon Steel(WCB, WCC, A105) Chrome-moly Steel(WC6, WC9, C12A, F11, F22, F91) Stainless Steel(CF8, CF8M, CF3, CF3M, F304, F304L, F310, F316L) Duplex Stainless Steel, Monel, AL Bronze, Inconel 625 Hastelloy B/C, Other Alloy
PACKING	RTFE, Reinforced RTFE V Type Packing, Soft Graphite Graphite Combined Packing etc.
GASKET	Graphite + 316L or Other Composite Gaskets
OPERATING TEMPERATURE RANGE	-58˚F to +1,050˚F -50˚C to +565˚C Option : -320˚F to +1,562˚F -192˚C to +850˚C
ACTUATOR	Pneumatic Diaphragm Pneumatic Cylinder Electric Motorized Electric Hydraulic

STANDARD TRIM SPECIFICATION

Unbalanced Plug Type - Quick Change Trim

SIZE RANGE	1/8" to 6"
TRIM TYPE	P-Port (Parabolic Contoured Plug) Micro Flow Split Plug Multi-Step (Cascade) Cage Window Low-Noise Drilled Hole Cage (1/2/3-Stage) Anti-Cavitation Channel Cage (1/2/3-Stage) Labyrinth Disk Stack Hybrid Trim (Disk Stack + Drill Hole Cage)
PLUG GUIDE METHOD	Top Guide, Cage Guide
FLOW DIRECTION	Gas, Steam : Flow to Open Liquid : Flow to Close (* Note)
Cv RANGE	0.003 to 400
FLOW CHARACTERISTIC	Linear, Equal %, Modified Equal %, Quick Open
SEAT LEAKAGE	FCI-70.2 Standard : ANSI Class IV Option : ANSI Class V ANSI Class VI (Soft Seat) Option : MSS-SP61 (On-Off)
MATERIAL	316 SS, 316 SS + Stellite #6 Hardeness 410 SS/ 400C SS 17-4PH, F22(Nitride treatment), F91 Inconel 718, XM19 Solid Tungsten Carbied Etc.

Note! Flow Direction can be changed according to your specifications.

SPECIAL SPECIFICATION

SPECIAL SPECIFICATIONS	Material Certificate, Characteristics Testing, Radiation Testing(RT) Liquid Penetration Testing (PT), Low Temperature Testing
SPECIAL REQUIREMENTS	Oxygen Clean, Copper-Free Alloy. Water-Free Special Piping and Fitting, Salty Environment Proof Cold Area Proof, Tropical Area Proof, Non-standard Painting

SELECTION GUIDELINE

VELOCITY LIMITATIONS

In selecting a valve for either a liquid or gas/vapour application one of the major considerations is the effect of fluid velocity. High velocity could lead to operational problems including erosion, excessive vibration and instability. The following tables indicate the maximum recommended velocity values for liquid and gas/vapor services.

Recommended Maximum Velocities for Liquid Flow

Trim Design	Valve Size		Carbon Steel		Alloy Steel		Bronze	
Size	in	mm	ft / sec	m / sec	ft / sec	m / sec	ft / sec	m / sec
Microflow	0.5 to 1	15 to 25	43	13.1	52	15.8	26	7.6
Contoured	0.5 to 2	12 to 50	41	12.5	46	14	25	7.6
	2.5 to 6	65 to 150	34	10.4	34	10.4	20	6.2
	8 to 14	200 to 350	29	8.9	29	8.9	17	5.2
	16 to 18	400 to 450	22	6.7	22	6.7	13	14
	20	500	18	5.5	18	5.5	11	3.4
	24	600	12	3.7	12	3.7	7	2.1
Hard Facing	0.5 to 12	15 to 300	43	13.1	52	15.8	26	7.6
	14 to 500	350 to 500	35	10.7	43	13.1	21	6.4
	24	600	25	7.6	35	10.7	15	4.6

Recommended Maxiumum Velocities for Gas / Vapor Flows

Trim Design	Valve Size		Maximum Inlet		Maxinum Outlet		Maximun Out Mach. No. for Required Noise Level		
Size	in	mm	ft / sec	m / sec	ft / sec	m / sec	>95dBA	<95dBA	85dBA
Microflow	0.5 to 1	15 to 25	475	144	830	253	0.65	0.5	0.3
Contoured	0.5 to 2	12 to 50	340	104	830	253	0.65	0.5	0.3
	2.5 to 6	65 to 150	295	90	830	253	0.65	0.5	0.3
	8 to 14	200 to 350	265	81	830	253	0.65	0.5	0.3
	16 to 18	400 to 450	190	58	830	253	0.65	0.5	0.3
	20	500	150	46	830	253	0.65	0.5	0.3
	24	600	115	35	830	253	0.65	0.5	0.3
Hard Facing	0.5 to 24	15 to 600	475	144	830	253	0.65	0.5	0.3

TEMPERATURE RANGE / SEAT LEAKAGE

Contoured Trim

Valve Size		Body Rating	Seat Type	Packing Material	Temperature Range						Seat Leakage IEC 60534-4 and FCI 70-2 Class	
					Standard Bonnet		Extension Bonnet		Cryogenic Bonnet			
in	mm				min.	max.	min.	max.	min.	max.	Standard	Option
0.5 to 8	15 to 200	ANSI 150 to 600 LBs and Equivalent JIS, PN	Metal	PTFE Aramid	-20°F (-29°C)	+450°F (+232°C)	-100°F (-73°C)	+800°F (+427°C)			IV	V
				Graphite	-20°F (-29°C)	+800°F (+427°C)	-100°F (-73°C)	+800°F (+427°C)				
				V-PTFE					-320°F (-196°C)	+450°F (+232°C)		
			Soft	PTFE Aramid	-20°F (-29°C)	+450°F (+232°C)	-100°F (-73°C)	+450°F (+232°C)			VI	

Low-Noise / Anti-Cavitation Trim

Valve Size		Body Rating	Seat Type	Packing Material	Temperature Range						Seat Leakage IEC 60534-4 and FCI 70-2 Class	
					Standard Bonnet		Extension Bonnet		Cryogenic Bonnet			
in	mm				min.	max.	min.	max.	min.	max.	Standard	Option
0.5 to 8	15 to 200	ANSI 150 to 600 LBs and Equivalent JIS, PN	Metal	PTFE Aramid	-20°F (-29°C)	+450°F (+232°C)	-100°F (-73°C)	+800°F (+427°C)			IV	V
				Graphite	-20°F (-29°C)	+800°F (+427°C)	-100°F (-73°C)	+800°F (+427°C)				
				V-PTFE					-320°F (-196°C)	+450°F (+232°C)		

1. ANSI 900-1500LBs available only in 0.5 to 4 inch (15 to 100 mm) sizes. ANSI 2500LBs available only in 0.5 to 2 inch (15 to 50 mm) sizes.
2. See Materials of Construction Tables for other temperature limitations.
3. 2-Stage design only available with Quick Change seat rings.
4. 2-Stage Anti-Cavitation Trim not available in 6 inch (150 mm) and 8 inch(200 mm) size.
5. PTFE Aramid Inorganic Coil Packing for low emissions applications is limited to maximum pressure and temperature as shown in the chart below.
6. Soft seat is limited to a maximum of 1000 psi (70 bar) pressure drop and a maximum of 450°F (232°C).

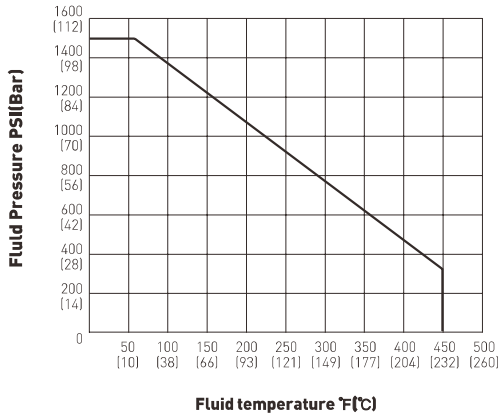

Pressure and Temperature Rating of LE Packing

Ratings / Connections

Valve Size		ANSI Class 150 (PN 20)				ANSI Class 300 (PN 50)				ANSI Class 600 (PN 100)			
Inch	mm	RF	SW	RTJ	BW	RF	SW	RTJ	BW	RF	SW	RTJ	BW
0.5	15	O	O	×	×	O	O	O	×	O	O	O	×
0.75	20	O	O	×	×	O	O	O	×	O	O	O	×
1	25	O	O	×	×	O	O	O	×	O	O	O	×
1.5	40	O	O	×	×	O	O	O	×	O	O	O	×
2	50	O	O	×	×	O	O	O	×	O	O	O	×
2.5	65	O	×	×	O	O	×	O	O	O	×	O	O
3	80	O	×	×	O	O	×	O	O	O	×	O	O
4	100	O	×	×	O	O	×	O	O	O	×	O	O
5	125	O	×	×	O	O	×	O	O	O	×	O	O
6	150	O	×	×	O	O	×	O	O	O	×	O	O

Valve Size		ANSI Class 150 (PN 20)				ANSI Class 300 (PN 50)				ANSI Class 600 (PN 100)			
Inch	mm	RF	SW	RTJ	BW	RF	SW	RTJ	BW	RF	SW	RTJ	BW
0.5	15	O	O	O	×	O	O	O	×	O	O	O	×
0.75	20	O	O	O	×	O	O	O	×	O	O	O	×
1	25	O	O	O	×	O	O	O	×	O	O	O	×
1.5	40	O	O	O	×	O	O	O	×	O	O	O	×
2	50	O	O	O	×	O	O	O	×	O	O	O	×
2.5	65	O	O	O	O	O	O	O	O	O	O	O	O
3	80	O	×	O	O	O	×	O	O	O	×	O	O
4	100	O	×	O	O	O	×	O	O	O	×	O	O
5	125	O	×	×	O	O	×	O	O	O	×	O	O
6	150	O	×	×	O	O	×	O	O	O	×	O	O

1. Standard flange of Ra 125-250. Other flange facings and surface finishes available.

MATERIALS OF CONSTRUCTION

STANDARD CARBON STEEL VERSION

Part No.	Temperature Range	-20°F (-29°C) ▼	450°F (232°C) ▼	650°F (343°C) ▼	800°F (427°C) ▼
	Description	**Standard Materials**			
1	Body	A216 Gr. WCB			
2	Bonnet	A216 Gr. WCB			
3	Seat Ring	304 Stainless Steel			
		410 Stainless Steel + Heat Treatment			
		304 Stainless Steel + Stellite #6 Hard Facing			
4	Plug/Disc	304 Stainless Steel			
		410 Stainless Steel + Heat Treatment			
		304 Stainless Steel + Stellite #6 Hard Facing			
5	Valve Stem	304 Stainless Steel			
		410 Stainless Steel + Heat Treatment			
		17-4PH (630) Stainless Steel			
6	Cage	304 Stainless Steel			
		410 Stainless Steel + Heat Treatment			
7	Guide Bushing	410 Stainless Steel + Heat Treatment			
		304 Stainless Steel + Stellite #6 Hard Facing			
8	Body Gasket	316 Stainless Steel+Graphite -Sprial Wound			
		316 S.S. +Teflon -Sprial Wound			
9	Seat Gasket	316 Stainless Steel+Graphite -Sprial Wound			
		316 S.S. +Teflon -Sprial Wound			
10	Paug Pin	316 Stainless Steel			
11	Packing	V-PTFE	Graphite		
		PTFE Aramid Inorganic Coil			
12	Lantern Ring	304 Stainless Steel			
13	Packing Gland	304 Stainless Steel			
14	Packing Flange	304 Stainless Steel			
15	Body Stud Bolt	A193 Grade B7			
16	Body Stud Nut	A194 Grade 2H			
17	Packing Stud Bolt	A193 Grade B8			
18	Packing Stud Nut	A194 Grade 8			
19	Yoke Half Clamp	304 Stainless Steel			
20	Clamp Hex. Bolt	A193 Grade B8			
21	Clamp Hex. Nut	A194 Grade 8			

1. 17-4 PH ST.ST will be substituted when required due to the differential pressure.
2. 410 SS bushing not used in combination with 316 SS trim.
3. Standard material for two stage lo-db (drilled hole) cages.
4. Required for Quick Change trim only.
5. Use Solid Stellite plug for Cv smaller than 1.7.
6. Guide bushings not used with close clearance trim.
7. Solid Stellite is not available for Low-Noise/Anti-Cavitation plugs.

STANDARD STAINLESS STEEL VERSION

Part No.	Temperature Range	-20°F (-29°C) ▼	450°F (232°C) ▼	650°F (343°C) ▼	800°F (427°C) ▼
	Description	**Standard Materials**			
1	Body	A351 Gr. CF8M			
2	Bonnet	A351 Gr. CF8M			
3	Seat Ring	316 Stainless Steel			
		316 Stainless Steel + Stellite #6 Hard Facing			
4	Plug/Disc	316 Stainless Steel			
		316 Stainless Steel + Stellite #6 Hard Facing			
5	Valve Stem	316 Stainless Steel			
		17-4PH(630) Stainless Steel			
6	Cage	316 Stainless Steel			
7	Guide Bushing	316 Stainless Steel + Stellite #6 Hard Facing			
8	Body Gasket	316 Stainless Steel+Graphite -Sprial Wound			
		316 S.S. + Teflon -Sprial Wound			
9	Seat Gasket	316 Stainless Steel+Graphite -Sprial Wound			
		316 S.S. +Teflon -Sprial Wound			
10	Paug Pin	316 Stainless Steel			
11	Packing	V-PTFE	Graphite		
		PTFE Aramid Inorganic Coil			
12	Lantern Ring	316 Stainless Steel			
13	Packing Gland	316 Stainless Steel			
14	Packing Flange	316 Stainless Steel			
15	Body Stud Bolt	A193 Grade B8			
16	Body Stud Nut	A194 Grade 8			
17	Packing Stud Bolt	A193 Grade B8			
18	Packing Stud Nut	A194 Grade 8			
19	Yoke Half Clamp	304 Stainless Steel			
20	Clamp Hex. Bolt	A193 Grade B8			
21	Clamp Hex. Nut	A194 Grade 8			

1. Required for Quick Change trim only.
2. Standard material for two stage lo-db (drilled hole) cages.
3. Use Solid Stellite plug for Cv smaller than 1.7.
4. Guide bushings not used with close clearance trim.
5. Solid Stellite is not available for Low-Noise/Anti-Cavitation plugs.

STANDARD CHROME MOLY VERSION

Part No.	Temperature Range	-20°F (-29°C) ▼	450°F (232°C) ▼	650°F (343°C) ▼	800°F (427°C) ▼
	Description	**Standard Materials**			
1	Body	A217 Gr. WC9			
2	Bonnet	A217 Gr. WC9			
3	Seat Ring	304 Stainless Steel			
		410 Stainless Steel + Heat Treatment			
		304 Stainless Steel + Stellite #6 Hard Facing			
4	Plug/Disc	304 Stainless Steel			
		410 Stainless Steel + Heat Treatment			
		304 Stainless Steel + Stellite #6 Hard Facing			
5	Valve Stem	304 Stainless Steel			
		410 Stainless Steel + Heat Treatment			
		17-4PH (630) Stainless Steel			
6	Cage	304 Stainless Steel			
		410 Stainless Steel + Heat Treatment			
7	Guide Bushing	410 Stainless Steel + Heat Treatment			
		304 Stainless Steel + Stellite #6 Hard Facing			
8	Body Gasket	316 Stainless Steel+Graphite -Sprial Wound			
		316 S.S. +Teflon -Sprial Wound			
9	Seat Gasket	316 Stainless Steel+Graphite -Sprial Wound			
		316 S.S. +Teflon -Sprial Wound			
10	Paug Pin	316 Stainless Steel			
11	Packing	V-PTFE	Graphite		
		PTFE Aramid Inorganic Coil			
12	Lantern Ring	304 Stainless Steel			
13	Packing Gland	304 Stainless Steel			
14	Packing Flange	304 Stainless Steel			
15	Body Stud Bolt	A193 Grade B7			
16	Body Stud Nut	A194 Grade 2H			
17	Packing Stud Bolt	A193 Grade B8			
18	Packing Stud Nut	A194 Grade 8			
19	Yoke Half Clamp	304 Stainless Steel			
20	Clamp Hex. Bolt	A193 Grade B8			
21	Clamp Hex. Nut	A194 Grade 8			

1. 17-4 PH ST.ST will be substituted when required due to the differential pressure.
2. Required for Quick Change trim only.
3. Standard material for two stage lo-db (drilled hole) cages.
4. Use Solid Stellite plug for Cv smaller than 1.7.
5. Guide bushings not used with close clearance trim.
6. Solid Stellite is not available for Low-Noise/Anti-Cavitation plugs.

NACE MATERIALS CONSTRUCTION

Part No.	Temperature Range	-20°F (-29°C) ▼	450°F (232°C) ▼	650°F (343°C) ▼	800°F (427°C) ▼
	Description	**Standard Materials**			
1	Body	A351 Gr. CF8M			
2	Bonnet	A351 Gr. CF8M			
3	Seat Ring	316 Stainless Steel			
		316 Stainless Steel + Stellite #6 Hard Facing			
4	Plug/Disc	316 Stainless Steel			
		316 Stainless Steel + Stellite #6 Hard Facing			
5	Valve Stem	316 Stainless Steel			
6	Cage	316 Stainless Steel			
7	Guide Bushing	316 Stainless Steel + Stellite #6 Hard Facing			
8	Body Gasket	316 Stainless Steel+Graphite -Sprial Wound			
		316 S.S. + Teflon -Sprial Wound			
9	Seat Gasket	316 Stainless Steel+Graphite -Sprial Wound			
		316 S.S. +Teflon -Sprial Wound			
10	Paug Pin	316 Stainless Steel			
11	Packing	V-PTFE	Graphite		
		PTFE Aramid Inorganic Coil			
12	Lantern Ring	316 Stainless Steel			
13	Packing Gland	316 Stainless Steel			
14	Packing Flange	316 Stainless Steel			
15	Body Stud Bolt	A193 Grade B8			
16	Body Stud Nut	A194 Grade 8			
17	Packing Stud Bolt	A193 Grade B8			
18	Packing Stud Nut	A194 Grade 8			
19	Yoke Half Clamp	304 Stainless Steel			
20	Clamp Hex. Bolt	A193 Grade B8			
21	Clamp Hex. Nut	A194 Grade 8			

1. Materials and processes in accordance with the requirements of NACE specification MR 0103 Applications requiring compliance to MR 0175, 2003 Rev. or ISO 15156 would require engineering review.
2. Inconel 718 will be substituted in applications when required due to the differential pressure.
3. Materials designated for these parts conform to NACE Class III (unexposed) bolting requirements.
4. Materials designated for these parts conform to NACE Class I or Class II (exposed) bolting requirements.
5. Consult JFLOW for NACE Applications above ANSI Class 600 (PN 100) rating or above 450°F (232°C).
6. Optional component and materials for Close Clearance low flow trim option.
7. To be used with stainless steel body and bonnet.
8. Guide bushing not used with close clearance trim.
9. Solid Stellite is not available for Low-Noise/Anti-Cavitation plugs.

2000 SERIES SINGLE SEAT CONTROL VALVE

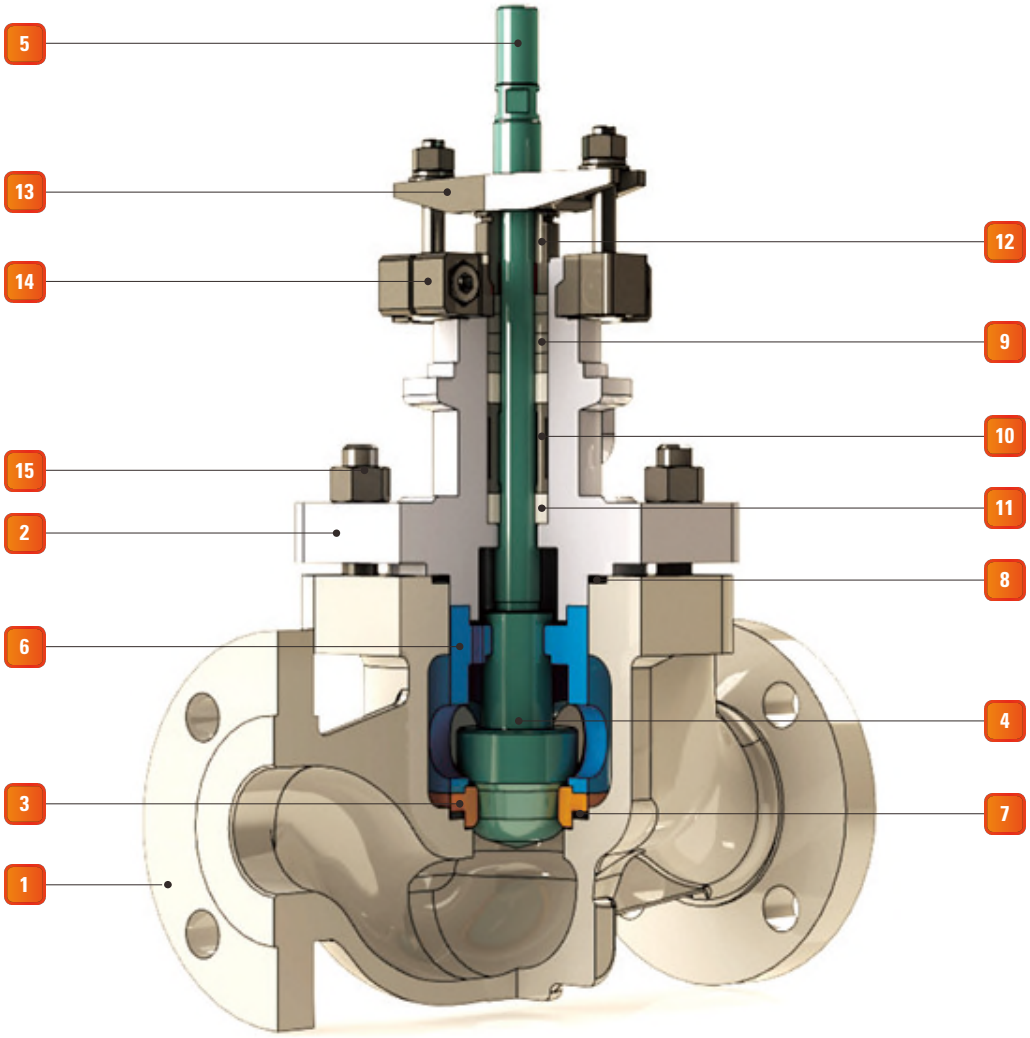

1	Valve Body	9	Packing
2	Valve Bonnet	10	Packing Spacer
3	Seat Ring	11	Stem Guide
4	Plug	12	Packing Follower
5	Stem	13	Packing Flange
6	Cage/Retainer	14	Yoke Clamp
7	Seat Ring Gasket	15	Body Stud Bolt & Nut
8	Body Gasket	16	

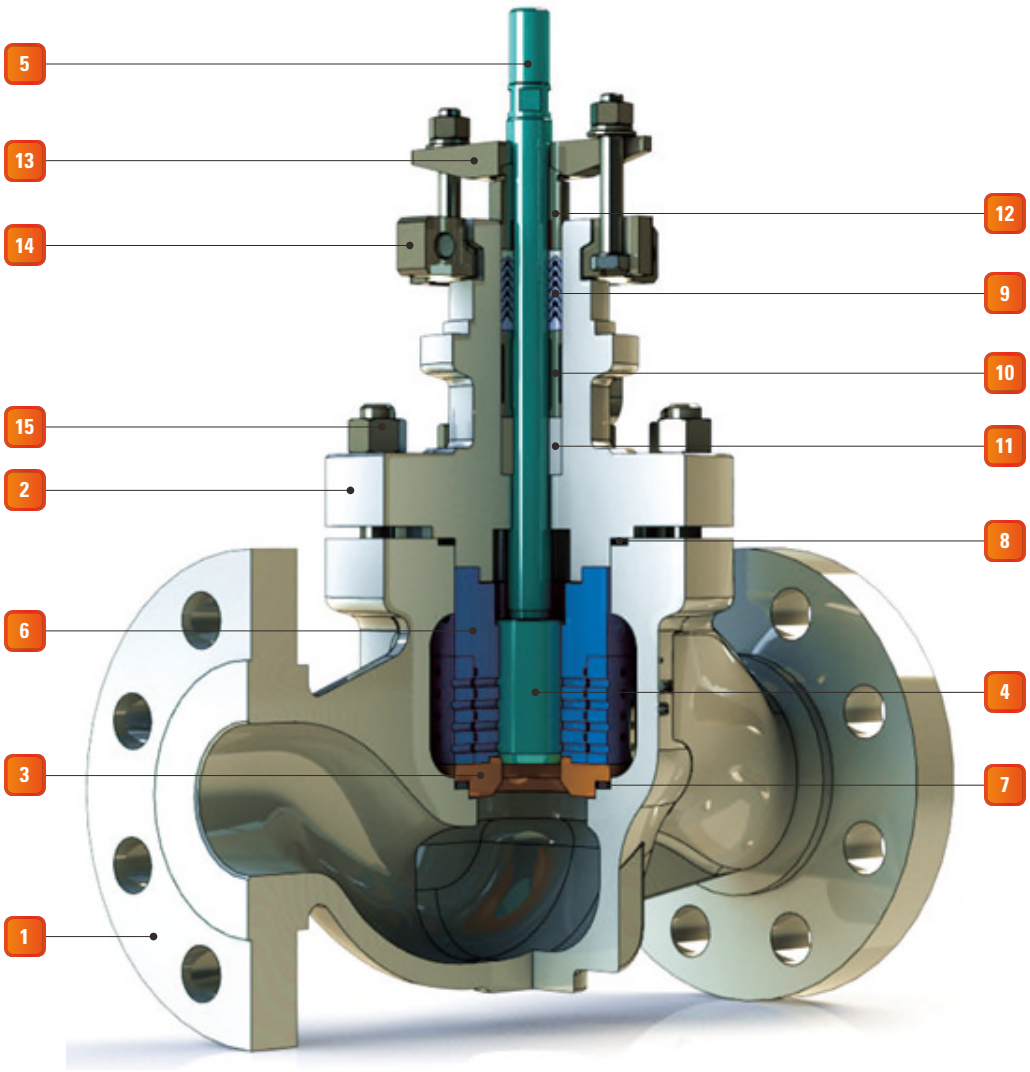

1	Valve Body	9	Packing
2	Valve Bonnet	10	Packing Spacer
3	Seat Ring	11	Stem Guide
4	Plug	12	Packing Follower
5	Stem	13	Packing Flange
6	Cage/Retainer	14	Yoke Clamp
7	Seat Ring Gasket	15	Body Stud Bolt & Nut
8	Body Gasket	16	

2000 SERIES BODY DIMENSIONS (mm)

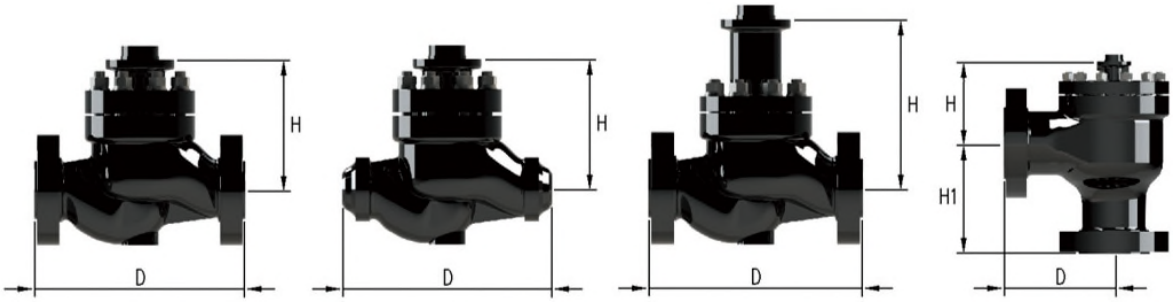

ANSI Class 150 through 2500 and equivalent PN

Valve Size (inches)	" D "																			
	ANSI Class 150-300		ANSI Class 600		ANSI Class 900-1500		ANSI Class 2500		ANSI Class 150		ANSI Class 300		ANSI Class 600		ANSI Class 900		ANSI Class 1500		ANSI Class 2500	
	PN 20-50		PN 100		PN 150-250		PN 420		PN 20		PN 50		PN 100		PN 150		PN 250		PN 420	
	SW	BW	SW	BW	SW	BW	SW	BW	RF	RTJ	RF	RTJ	RF	RTJ	RF	RTJ	RF	RTJ	RF	RTJ
1/2	-	-	-	-	-	-	-	-	184	-	190	190	**203**	**203**	**292**	**292**	**292**	**292**	**318**	**318**
3/4	210	-	210	-	216	-	-	-	184	-	194	194	206	206	**292**	**292**	**292**	**292**	**318**	**318**
1	210	-	210	-	216	-	-	-	184	184	197	197	210	210	292	292	292	292	**318**	**318**
1-1/2	251	-	251	-	235	-	-	-	222	222	235	235	251	251	333	333	333	333	**381**	**381**
2	286	-	286	286	292	375	-	318	254	254	267	267	286	286	375	375	375	375	**400**	**400**
3	-	318	-	337	-	460	-	498	298	298	318	318	337	337	441	441	460	460	498	498
4	-	368	-	394	-	530	-	575	352	352	368	368	394	394	511	511	530	530	575	575
6	-	473	-	508	-	768	-	819	451	451	473	473	508	508	714	714	768	768	819	819

Valve Size (inches)	" H "								
	Standard Bonnet				Extension Bonnet				Bellows Bonnet
	ANSI Class 150-300	ANSI Class 600	ANSI Class 900-1500	ANSI Class 2500	ANSI Class 150-300	ANSI Class 600	ANSI Class 900-1500	ANSI Class 2500	ANSI Class 150-300
	PN 20-50	PN 100	PN 150-250	PN 420	PN 20-50	PN 100	PN 150-250	PN 420	PN 20-50
1/2	86	86	-	-	-	-	-	-	225
3/4	124	124	-	-	228	228			235
1	124	124	187	-	228	228			235
1-1/2	145	145	187	-	255	255			252
2	156	156	230	-	256	256			263
3	210	210	274		320	320	384	450	335
4	260	265	334		350	355			337
6	323	327	455		392	396	555	555	555

Valve Size (inches)	" H1 "																			
	ANSI Class 150-300		ANSI Class 600		ANSI Class 900-1500		ANSI Class 2500		ANSI Class 150		ANSI Class 300		ANSI Class 600		ANSI Class 900		ANSI Class 1500		ANSI Class 2500	
	PN 20-50		PN 100		PN 150-250		PN 420		PN 20		PN 50		PN 100		PN 150		PN 250		PN 420	
	SW	BW	SW	BW	SW	BW	SW	BW	RF	RTJ	RF	RTJ	RF	RTJ	RF	RTJ	RF	RTJ	RF	RTJ
1/2	92	-	101	-	-	-	-	-	92	-	95	-	101.5	-	-	-	-	-	-	-
3/4	92	-	97	-	-	-	-	-	92	-	97	-	103	-	-	-	-	-	-	-
1	92	-	99	-	-	-	-	-	92	-	99	-	105	-	-	-	-	-	-	-
1-1/2	117	-	125	-	-	-	-	-	111	-	117	-	125	-	-	-	-	-	-	-
2	133	-	143	-	-	187.5	-	-	127	-	133	-	143	-	187.5	187.5	187.5	187.5	-	-
3	-	159	-	168	-	230	-	330	149	-	159	-	168	-	230	230	230	230	330	330
4	-	184	-	197	-	265	-	368.5	176	-	184	-	197	-	265	265	265	265	368.5	368.5
6	-	284	-	305	-	-	-	-	272	-	284	-	305	-	-	-	-	-	-	-

ACTUATOR DIMENSIONS (MM)

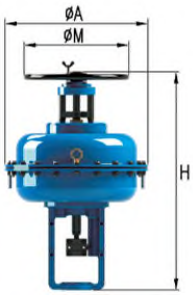

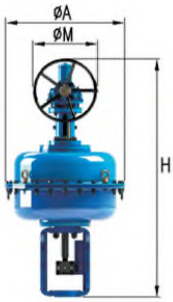

Diaphragm Actuator Dimensions

Actuator Size	A	Without Handwheel		Top Handwheel			Side Handwheel		
		H		H		M	H		M
		DA	RA	DA	RA	DA, RA	DA	RA	DA, RA
250	252	332	352	474	474	250	-	-	-
290	294	369	389	540	540		-	-	-
370	374	410	430	580	580		-	-	-
370L	374	-	480	-	655		-	-	-
480	482	629	649	-	-	-	1162	1162	500
480H	482	-	649	-	-	-	-	1162	
550	560	678	698	-	-	-	1210	1210	
550L	560	-	756	-	-	-	-	1287	

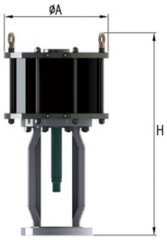

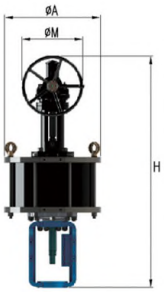

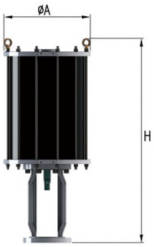

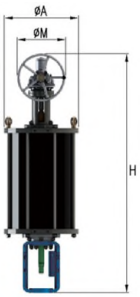

Cylinder Actuator Dimensions

Actuator Size	A	Stroke	Double Type		Spring Return Type				M
			Without Handwheel	Side Handwheel	Without Handwheel		Side Handwheel		
			H	H	H		H		
					DA	RA	DA	RA	
12	370	100	711	1127	1055	1025	1471	1441	400
		120	731	1147	1055	1025	1471	1441	
		150	821	1272	-	-	-	-	
16	472	100	697	1137	1132	1102	1614	1584	
		120	717 / 877	1157 / 1317	1132	1102	1614	1584	
		150	809 / 907	1282 / 1382	1210	1192	1683	1665	
		200	957	1482	-	-	-	-	
20	578	150	916	1389 / 1540	1322	1322	1795	1795	
		200	966	1489 / 1640	1364	1364	1837	1837	
		300	1133	1873	-	-	-	-	500

*Allowable pressure Drop [PSIG] for Actuator Selection

Flow to Open, TFE Packing, Metal Seat														
Orifice Diameter		Travel	Actuator Size											
			250		290		370		370L		480		550	
			ANSI Leakage Class											
inch	mm	mm	IV	V	IV	V	IV	V	IV	V	IV	V	IV	V
5/32~	4~16	20	625		1222	853	1848	1848	2133	2133				
5/8 in		30					2559	2417	3128	3128				
3/4 in	20	20	426		1137	341	1848	1848	2133	2133				
		30			540		1848	1848	2559	2275				
1.0 in	25	20	255		796		1848	1564	2133	2133				
		30					1393	767	1820	1336				
1-1/4 in	32	20	128		497		1322	824	1677	1237				
		30					910	312	1208	682				
1-1/2 in	40	20	85		355		1023	526	1279	853				
		30			99		696	142	924	426				
2 in	50	30			42		426		597	142	995	625		
		40			99		184		327		995	625		
2-1/2 in	65	30					227		327		597	255		
		40					85		170		597	255		
3 in	80	40					56		113		426	142	654	369
		50									327	42	654	369
4 in	100	40							56		227		341	128
		50									156		341	128
		60									99		284	71
5 in	125	50									71		170	
		60											142	
6 in	150	60											85	
		70											56	

Flow to Close, TFE Packing, Metal Seat														
Orifice Diameter		Travel	Actuator Size											
			250		290		370		370L		480		550	
			ANSI Leakage Class											
inch	mm	mm	IV	V	IV	V	IV	V	IV	V	IV	V	IV	V
5/32~ 5/8 in	4~16	20	668		1222	853	1848	1848	2133	2133				
		30			739		2559	2417	3128	3128				
3/4 in	20	20	426		1137	341	1848	1848	2133	2133				
		30			540		1848	1848	2559	2275				
1.0 in	25	20	255		796		1848	1564	2133	2133				
		30			312		1393	767	1820	1336				

HOW TO ORDER

Actuator	Series	Trim Type	Characteristic	Plug Type	Body Material[1]
Spring Diaphragm **870** Air-to-close **880** Air-to-open **Spring Cylinder** **660** Air-to-close **670** Air-to-open **\680** Double Acting	2000 **2**	**1** Quick Change **2** Threaded Seat **3** Soft Seat **4** Soft Seat Quick Change **5** Anti-Cav	**1** Linear **2** Equal Percent **3** Modified Percent	**1** Contoured **2** Micro Trim **3** Quick Opening	**2** WCB/A105 **3** 316 **A** 304 **AL** 304L **3L** 316L **4** Alloy 20 **8** A350 LF2 **9** Duplex

Packing	Body Gasket	End Connection*	Options [2]	Size
T Teflon **G** Graphite **LE** Low Emission	**S** Standard 400°F **H** High Temp 750°F **ST** Super Temp 1049°F	**S** Threaded **SW** Socket Weld **BW** Butt Weld **F1** 150 **F3** 300 **F6** 600 **F9** 900 **F15** 1500 **F25** 2500 **M** BSPT Threads	**EB** - Ext. Bonnet **BS** - Bellows	3/4" - 8"

* DIN Flanges available

[1] Please see the J Flow Controls Configurator for a full list of body materials

2 Extended Bonnet - Add EB (Example: 880-EB21212TSF3-200)

PARTS AND SERVICE CONTACT J FLOW CONTROLS.
I-O MANUALS ARE AVAILABLE ONLINE.

JFLOW®
CONTROLS

4665 Interstate Drive
Cincinnati, OH 45246
513-731-2900
jflowcontrols.com